Soladyne
A Division of Rogers Corporation
7447 Convoy Court, San Diego, CA 92111

MECHANICAL DESIGN GUIDE

FOR

MICROWAVE FREQUENCY
PRINTED CIRCUIT BOARD FABRICATION
ON PTFE BASED CERAMIC OR GLASS SUBSTRATES

revision 85-H

The following is intended as a basic mechanical design guide for your consideration of existing fabrication parameters of microwave circuit boards produced in production quantities by Soladyne, a Division of Rogers Corporation.

MATERIALS

At Soladyne, we fabricate circuit boards only on polytetrafluoroethylene based ceramic and glass dielectric materials.

All MIL-P-55110 material that we use is certified to MIL-P-13949 dash numbers 6,7,8, or 9. This includes types GT, GX, GR, GY, and GP. In addition, we process ceramic loaded PTFE and glass laminates that are not covered by MIL-P-13949 such as Rogers RT/duroid 6010, 3M E10, and Keene 810. Heavy metal backed Teflon board constructions also are not yet covered by MIL spec.

HOLES - UNPLATED AND PLATED

Hole diameter minimums have a lot to do with the thickness of the material that the hole passes through. We call this relationship the aspect ratio. For example, a hole aspect ratio of 3:1 on a circuit board .063 inches thick would suggest a minimum hole diameter limit of .021 inches.

A hole diameter of .013 inches is our lower limit diameter on board thickness of .030 inches and less. For unplated holes in thicker materials, we can fabricate to a 5:1 or better aspect ratio. For plated holes, this value changes to 3:1. Design tip - if you need a smaller hole than the above aspect ratios allow, we recommend countersinking one or both ends to effectively reduce the board thickness in that area.

Note that when a given hole is plated with .001 inches of copper - the

specification included in MIL-P-55110, for example - the diameter "closes" by .002 inches, minimum. Please specify hole sizes as "finished".

For all hole sizes less than .025 inches, the cost to fabricate is inversely proportional to the hole diameter due to drill breakage, handling problems, and higher drill costs.

XL UNITS

Soft substrate machining and holes are produced on CNC Excellon drilling/routing machines. Our XL-3 D/R, for example, can handle a maximum of 66 X 24 inches.

DEPTH WORK

Precision depth work in the z direction must allow for the tolerances of the fabrication equipment and the tolerances of the material as supplied.

We recommend that you specify depth work as a tolerance on the "material left" as opposed to on the "material removed". Another way is for us to build a special tooling fixture with a known distance from the baseplate to suspend the part in the z direction while machining.

Consultation with our application engineers is recommended prior to setting difficult tolerances. Normally, for z direction dimensions we can hold +/- .002 inches plus the thickness tolerance of the material itself as purchased.

SLOTS MACHINING

Through slots and pockets are produced with round tools. Thus the corners of the slots or pockets must have a specified radius or we must be permitted to go past the 90 degree corners in one direction or the other. For these features, a .030 inch minimum radius is recommended for most depths.

PERIPHERY

Most part peripheries are generated by routing. For high part quantities or peripheries that cannot be done with routing on materials less than .031 inches thick, we generally build a punch and die or a steel rule die to stamp out the part periphery. Depending on tolerances, shape complexity, size, and number of hits, the cost for this tool will range between $400 and $4000. For a steel rule die, tolerances of +/- .007 can usually be held. For a hard steel punch and die, tolerances of +/- .002 inches can be held. Some materials, such as woven glass laminate, do not punch cleanly.

For materials thicker than .031 inches, we must position and hold the part internally with two or more registration pin-holes and rout or mill the edges. Tolerance by this approach is recommended generally at +/- .003 inches, minimum. Again, it depends on things like flat size and material type.

TRACE ETCHING

Generally, Soladyne can produce .003 inch lines and gaps with subtractive technology on 1/2 ounce copper. This depends somewhat on the design itself, the location of the critical lines and gap areas, and gap terminations into a bent line which may trap etching materials.

On one ounce copper, trace and gap tolerances of plus or minus .001 inches is normal. For higher precision tolerancing on traces or gaps, we recommend 1/2 ounce copper for a tolerance of plus or minus .0005 inches.

SODIUM ETCH

Also called Teflon etch, this treatment is required as a surface preparation for PTHs, plated edges, and bonding of PTFE based substrates. The treatment has a limited shelf life and discolors some substrates.

This process is not really an "etch" in that very little material, if any, is removed. Rather, the ions of the surface molecules are reoriented to accept electroless copper or bond film penetration.

Our maximum panel size for routine sodium etch production is 12 X 12 inches. Larger panels can be accommodated by special setup.

AUTOCLAVE BONDING

At Soladyne, we utilize our autoclave for all bonding of multilayer or stripline designs. Our autoclave is state-of-the-art in that it is a digitally controlled thermal and pressure cycle for high repeatability of process. The advantage to an autoclave is extremely uniform pressure over the part in a vacuum, allowing a minimum of trapped air and a virtual guarantee of dielectric constant for maximum part performance. As an added service, we can provide ultrasonic "C" scan data on each of your parts as assurance of a void free lamination.

Most of our customers specify 3M 6700 bonding film as the inner layer of adhesive for stripline constructions. This material has a Dk of 2.35 and a .0025 dissapation factor. The temperature cycle involves a controlled ramp to 425 degrees F. Other adhesives are available for your design requirements.

PLATING

We plate with all normal circuit board metals including:

Electroless copper	50 X 24 inches max
Electrolytic acid copper	30 X 24 inches max
Electroplated Tin/lead	30 X 24 inches max
Electroless gold	6 X 4 inches max
Electroplated Gold	12 X 12 inches max
Electrolytic Nickel	12 X 12 inches max
Immersion tin	30 X 16 inches max

All of these plating treatments have normal tolerances. For example, immersion gold plates out at about 20 micro inches. Some tolerances are included in existing MIL specs; for example, tin/lead plating is often specified by reference to MIL-P-81728A.

Sometimes these thicknesses are specified in microns. One micron is equal to 39 micro inches or 39 millionths of an inch. Conversely, there are 25 microns in a mil or .001 inches.

Soladyne has a new SFT 158V Fluorescent X-Ray coating thickness gauge made for us by Seiko Instruments. This unit gives us precision measurements and statistical process data on plating thickness and alloy composition.

EDGE PLATING

It is possible to do 100% edge plating only by moving the parts on the rack while plating. Even this results in some rack marks on the part. Make certain that your specification allows for several .050 inches diameter rack marks if 100% edge plating is required.

We recommend a design that allows two or more tab areas .250 inches wide and the thickness of the part to connect the part in panel form with a processing windowframe to which we will attach our electrical contacts for plating. Note that this approach avoids rack marks on the part. If you are concerned about high frequency leakage at the tab areas, we suggest PTH mode suppression holes just inside the tab exposed edge. After plating we can go back and machine off the tab area to get the periphery to print. We do need .050 minimum on either side of the tab on the plated edge that may be "unplated" by this machining step.

POCKET PLATING

Pocket plating on one side is routine. If specified on two sides of the part, plated pockets are very much more difficult due to trapped gas problems. Clearly, this is related to pocket depth - the smaller and deeper the pocket, the more likely air/gas entrapment will be a problem.

SLD8501 PLATED THROUGH HOLES TO ALUMINUM PROCESS

Soladyne holds the patent on a new plating process that allows superior bond of copper to aluminum. This attribute insures excellent thermal and electrical conductivity from the circuit side traces to the aluminum ground plane via plated through holes and edges. This innovation is much preferred over the older zincate pth process and allows replacement of the less reliable pin or rivet mechanical interconnection technique. Specify SLD8501 on your print - we will know what you want.

NICKEL PLATING UNDER GOLD

An inner layer of nickel between the copper and gold is not recommended for microwave designs. Instead, we suggest a relatively thick plating of 125 micro inches of gold to avoid any kind of copper "piping" concerns.

Why? In any subtractive technology such as etching, the etch normally undercuts the copper slightly but not the harder nickel, giving an edge sliver of gold on brittle nickel which may be unsupported by copper on both sides of each trace. These slivers can break off and short conductive traces. If nickel is required, we recommend 1/2 ounce copper foil or less to minimize this effect.

ART

At Soladyne, we work with "one to one" art with no etch factor. We adjust the process to the art, not the art to the process.

Typically, art is customer furnished on .007 inches thick silver halide mylar film, right reading glossy up emulsion down, both negative and positive. RRG is = "right reading glossy up".

Our in-house camera handles 38 X 38 inch maximum size and records on a 8 X 10 inch film. For unusually tough registration tolerances, we can produce the art necessary to double etch as a stress relieving step for dimensional control.

ANNULAR RINGS

For isolated annular rings at the end of a plated through hole, we recommend a minimum of .006 inches of ring as measured from the hole edge or .012 inches overall larger than the hole diameter. We strongly discourage the design use of unsupported plated through holes - holes that do not terminate at the surface of the board in an annular ring, pad area, or ground plane.

NC TAPES

Most drilling, routing, and milling is numerically controlled by programs which are generated by the Soladyne engineering staff. Customers must supply sufficient X and Y coordinate data in the form of hole listings on paper, on NC tape, or on MS/DOS or PC/DOS compatible 5 and 1/4 inch floppy disk. If this information is not supplied with the customer art and prints, Soladyne is ready to generate this data for additional charge.

Our digitizer can handle art sizes up to 23.75 X 23.75 inches with resolution of plus or minus .0001, position accuracy of plus or minus .0002, and position repetition of plus or minus .0001 inches. Together, this results in tolerances of plus or minus .0005 inches for digitized hole locations from artwork. Usually, plus or minus .001 is more than sufficient.

NRE CHARGES

Non-recurring engineering/tooling charges at Soladyne can involve the following to build your parts:

1. Bonding fixtures - used for bonded assemblies in the autoclave, these special aluminum fixtures are custom fitted to a given part size. If your part size does not fall into one of our fixture sizes in inventory at Soladyne, we build a custom fixture for your parts. Typically, these fixtures cost in the range of $500 each.

2. Imaging plates - our proprietary imaging process involves a special fixture for your part. Again, if a plate for your panel or part size is not in our inventory, we build one - cost is in the range of $170 each.

3. Step and repeat of art - in order to achieve the cost advantage of multiple part processing in panel form, we may choose to step and repeat the art master - this cost ranges from $100 to $300 for the art master.

4. Punches - as required - costs range from $300 to $4000 as the part geometry dictates.

5. Artwork modification for coupons - Compliance to MIL-P-55110D usually involves relocation and/or addition of coupons on your art in compliance with MIL-STD-275. If necessary, this charge is in the range of $500.

6. Group A testing - This cluster of tests costs $75 per sample. The number of samples required per the sampling plan to achieve compliance with MIL-P-55110 is dictated by MIL-STD-275.

7. Hydroscanning - On bonded assemblies, Soladyne offers hydroscanning test services on each board. First articles are $150, the next 10 pieces are at $50 each, unit pricing then drops to $25 each.

PART NUMBER MARKING

Part numbers on the part should be put in the art in a copper area. Because small copper characters standing alone on the substrate have low peel strength and are subject to handling damage, it is much better to show an etched part number as a negative so that the dielectric shows through as the character.

Other options include a stamped or silkscreened part number on a copper area, embossing, or to use a vibrapen.

MIL-I-45208 & MIL-P-55110

Soladyne has been quality certified to MIL-I-45208 by numerous major military hardware suppliers. This a critical QA spec for traceability, calibration, controls, and capabilities. Soladyne is QPL certified under MIL-P-55110 as an approved supplier with applicable Group A and Group B testing for Types I and II microwave frequency circuit boards. The current revision level is "D" and Soladyne is approved to that level.

Soladyne Division
Rogers Corporation
7447 Convoy Court
San Diego, CA 92111

Telephone number is 619-279-7872
FAX number is 619-277-9105
TWX number is 910-335-1738
FSCM number is 55655

THIN FILM MICROSTRIP CIRCUIT PRODUCTION MANUAL

Presented to James B. Beyer

University Of Wisconsin -- Madison
Department Of Electrical Engineering

Produced by Morgan K. Culver
August 1, 1984

Thin Film Microstrip Circuit Production

The following steps describe the procedure for design and production of thin film microstrip circuits on substrates such as alumina with gold/chromium metal cladding. The general procedure is as follows:

1. The first step involves designing the microstrip circuit including all line widths, lengths, and all other dimensions required for later circuit production. This step will determine the outer dimensions of the substrate on which the circuit will be etched.

2. Next, the layout is redrawn about twenty to twenty-eight times the actual dimensions and drawn to scale on a large piece of paper.

3. A large sheet of rubylith, the same size as the enlarged drawing, is then cut to the pattern of the circuit layout. Depending on which type of photo resist is used to etch the gold cladding, rubylith is removed from parts where the microstrip will appear and left untouched on the adjacent areas or visa versa.

4. The reduction camera exposes and reduces the pattern cut into the rubylith onto a glass plate which forms the mask used in the wafer etching process. This mask will be the actual size of the circuit.

5. After preparation of the wafer, photo resist is spun uniformly onto the wafer using a spinner where the rotation speed and resist thickness can be controlled accurately.

6. Next, the glass mask and the prepared wafer are placed in the mask aligner where the mask is aligned with the wafer. Then the mask and wafer are exposed to ultraviolet light. Certain areas of the wafer are protected from the light by the mask whereas the areas uncovered by the mask are exposed by the light.

7. The wafer is then developed to remove all exposed photo resist leaving the bare metalization uncovered. In this step the wafer is also baked to polymerize the unexposed resist and hence protect the underlying metal from being removed in the etching stage.

8. Using the correct etching chemicals the unwanted portion of the metal cladding is etched away leaving the micro-strip circuit pattern intact.

9. Finally the substrate is cleaned of any remaining photo resist and is then mounted in the device outer casing where all remaining elements, FET's, connectors, etc., are soldered into place.

In the material that follows, this generalized procedure is broken down into more specific steps which contain detailed information concerning the materials required, specific processes, and other information leading to the production of thin film microstrip circuits.

		Page
Unit 1. - - -	Making The Enlarged Scale Drawing.	4.
Unit 2. - - -	Cutting The Rubylith Pattern.	5.
Unit 3. - - -	Exposing The Glass Mask Using The Reduction Camera.	8.
Unit 4. - - -	Developing The Glass Mask.	12.
Unit 5. - - -	Preparation Of The Wafer With Photo Resist And The Spinner.	16.
Unit 6. - - -	Exposing The Wafer Using The Mask Aligner.	20.
Unit 7. - - -	Developing The Exposed Wafer.	24.
Unit 8. - - -	Etching The Wafer.	25.
Unit 9. - - -	Cleaning Of The Finished Microstrip Circuit.	28.
Appendix A. -	Chemicals And Material Supply Information.	30.

Unit 1. Making The Enlarged Scale Drawing.

The reason for making an enlarged scale drawing is to provide a pattern from which to cut the rubylith. Since the actual size of a microstrip line is very small, less than 1 mil (≈25 μm) in some cases, it is impossible to make an accurate mask without first enlarging the design on paper and then allowing the camera lens to make the critical reduction back to the original circuit size.

The operating limits listed below are imposed by the reduction camera:

Maximum enlarged drawing and rubylith size..... 21" x 30".
Maximun size of substrate which can be used..... 1" x 1.3".
Reduction factor range available..... 20.5X to 28X.

Most microstrip patterns that require thin film production are designed on substrates no bigger than 1" x 1" square. As an example; For a circuit to be realized on a 1" x 1" substrate, using the smallest reduction factor (20.5) the outer dimensions of the enlarged scale drawing should be about 20.5" x 20.5" square. Therefore, remembering that the largest drawing width allowed is 21", this example represents the approximate limits of operation using the reduction camera. Any smaller substrate or rubylith size may be used.

As a general rule; "The larger the reduction factor, the easier it is to realize very small line widths and the more accurate the enlarged scale drawing can be. The smaller the reduction factor, the larger the overall dimensions of the substrate can be." Hence, to realize 1 or 2 mil line widths on a smaller substrate, a larger reduction factor may be used but to use a full 1" x 1" substrate a smaller reduction factor must be used.

Keeping the previous constraints in mind, the steps for making the enlarged scale drawing are as follows:

1. Decide on the substrate size to be used.

2. Choose a reduction factor that falls within the con-

straints of the reduction system and does not magnify the outer dimensions of the substrate greater than 21" x 30".

3. Multiply the outer substrate dimensions by the chosen reduction factor and cut a large sheet of white paper to those dimensions. White construction paper works well for this step.

4. Multiplying each microstrip dimension by the reduction factor, carefully draw the circuit pattern on the paper. Use a drafting board or similar arrangement to allow an accurate reproduction of the circuit pattern. Also, use a dark soft leaded pencil or better yet, a black ink pen with a fine point since a drawing line that is too wide will result in reduced rubylith cutting accuracy.

5. Recheck all multiplications and dimensions on the enlarged drawing.

Unit 2. Cutting the Rubylith Pattern.

Rubylith is a translucent material composed of two sheets of plastic film back to back. One sheet is clear and is used as a backing. The other sheet is colored and is used to block light from passing through the rubylith. Red rubylith is required for the existing system since the screen of the reduction camera is green and the combination of this green light with the red film yields a black background and blocks out all light from passing to the camera lens. Therefore, the portion of the rubylith which still contains both layers of film will block the light and the portion where the red film has been removed (leaving only the clear backing) will pass the light.

After the large scale drawing has been completed the rubylith must be cut into the correct pattern. Depending on whether positive or negative photo resist is used for the etching stage, the red film must be removed either from the microstrip circuit lines or from the surrounding areas adjacent to the microstrip layout.

When positive photo resist is used: (See figure 2.1)

The rubylith must be cut such that the red film is removed from the areas where the microstrip circuit lines will be and not removed from the surrounding areas. The light that passes through the clear strips exposes the emulsion on the glass plate along the microstrip lines. The rubylith left on the area surrounding the circuit lines prevents the light from passing to the camera and therefore does not expose the emulsion on the glass plate.

The resulting glass mask will be dark along the circuit lines and clear everywhere else.

After the positive photo resist has been spun on the wafer and the aligning has been accomplished, the wafer is exposed to ultraviolet light. The subsequent developing stage then removes photo resist on the exposed areas surrounding the microstrip circuit lines. Baking the wafer polymerizes the photo resist not exposed to the light and hence protects the metal cladding from being etched.

Chemicals then etch the bare metalization where the photo resist has been removed leaving the metal cladding untouched on the microstrip lines.

```
* * * * * * * * * * * * * * * * * * * * * * * * * * * * * * * * * * *
*                                                                     *
*  NOTE:  The existing chip production system utilizes                *
*         positive photo resist and the rubylith should              *
*         be cut accordingly.  Under the assumption the              *
*         current set-up will be used in the future, the             *
*         remaining material in this manual describes the            *
*         production process using positive photo resist.            *
*         However, the same procedure applies if negative            *
*         photo resist is used with the rubylith cut                 *
*         according to the following paragraphs.                     *
*                                                                     *
* * * * * * * * * * * * * * * * * * * * * * * * * * * * * * * * * * *
```

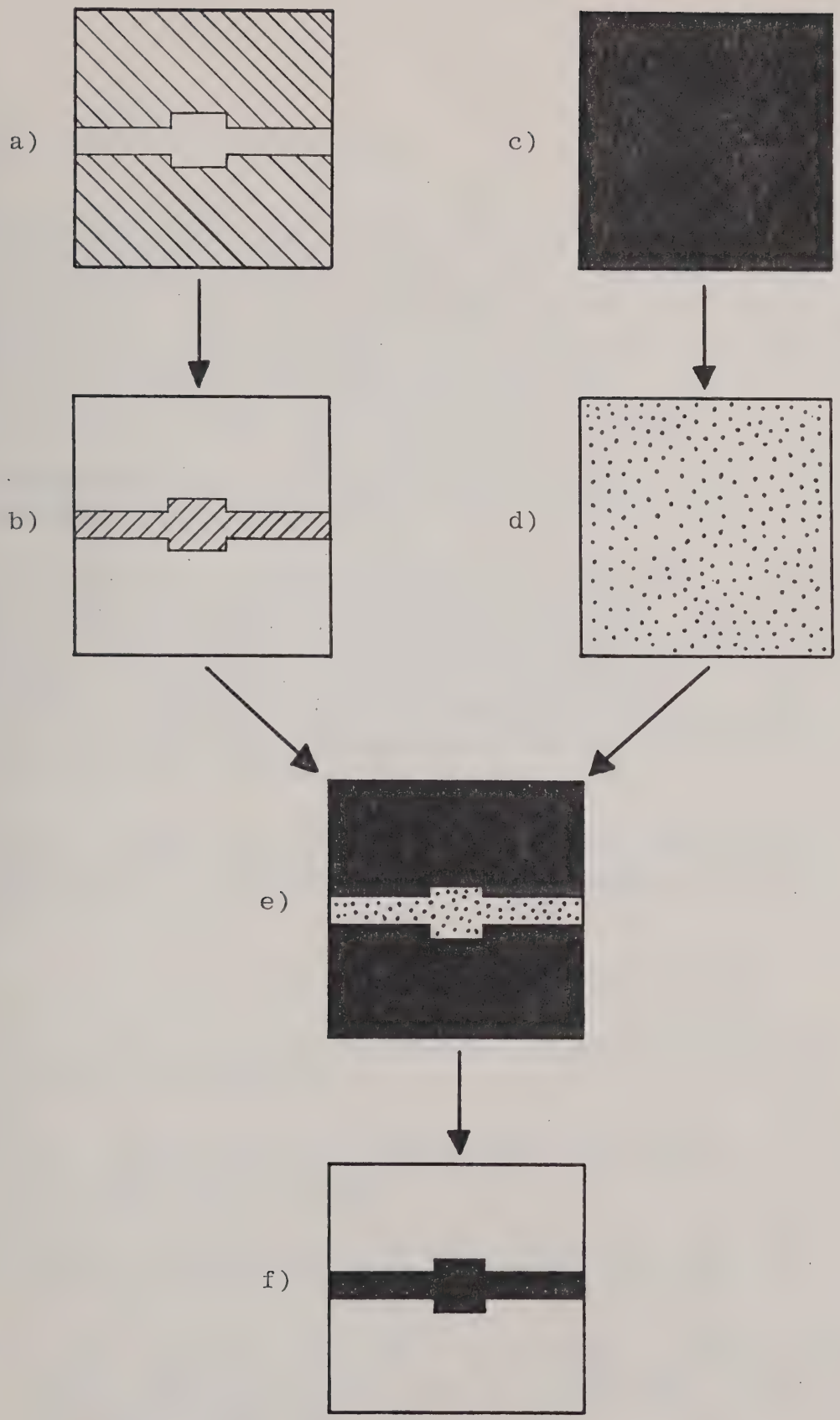

Figure 2.1--- a) Rubylith pattern. b) Exposed glass mask. c) Uncoated wafer. d) Wafer with photo resist coating. e) Wafer after exposing and developing stage. e) Etched microstrip circuit.

When negative photo resist is used:

The rubylith must be cut such that the red film is not removed from the areas where the microstrip circuit lines will be and is removed from the surrounding areas. The light that passes through the clear area exposes the emulsion on the glass plate surrounding the microstrip lines. The rubylith left along the circuit lines prevents the light from passing to the camera and therefore does not expose the emulsion on the glass plate.

The resulting glass mask will be clear along the circuit lines and dark everywhere else.

After the negative photo resist has been spun on the wafer and the aligning has been accomplished, the wafer is exposed to ultraviolet light. The subsequent developing stage then removes photo resist on the unexposed areas surrounding the microstrip circuit lines. Baking the wafer polymerizes the photo resist exposed to the light and hence protects the metal cladding from being etched.

Chemicals then etch the bare metalization where the photo resist has been removed leaving the metal cladding untouched on the microstrip lines.

The following steps indicate the correct procedure for making the rubylith pattern:

1. Cut a large piece of rubylith the same size as the enlarged scale drawing.

2. Making sure the red film side is up, tape the rubylith over the drawing to a smooth cutting surface.

3. Using a straight edge and X-ACTO knife, lightly trace all circuit patterns being careful to only cut through the red film and not the clear backing.

Note: In the event some of the circuit lines must extend to the edge of the wafer, be sure to cut these

lines all the way to the edge of the rubylith. However, in the event the outer casing, sometimes referred to as the "carrier," will be close enough to the finished circuit boards to cause excessive parasitic coupling between the end of a microstrip line and the carrier, the microstrip should not be allowed to extend to the end of the substrate. Instead, the rubylith should be cut such that the actual line length stops approximately 2 mm to 3 mm short of the edge of the substrate. In the event these lines will be used as input or output lines, the microstrip lines should extend just far enough to allow the connector center conductor to reach the circuit line.

4. Strip away the red film from the circuit line area. This may be accomplished by sliding the point of the knife under the edge of the film (preferably at a corner) and then pulling gently.

5. The rubylith should be kept free of dust and dirt. Rolling it inside the scale drawing paper works well.

Unit 3. Exposing The Glass Mask Using The Reduction Camera.

The microstrip pattern is transferred onto a glass plate also known as the "mask" via the reduction camera. The optical properties of the camera allow symetric reduction of the enlarged circuit pattern down to actual size.

The rubylith pattern is mounted to a green luminescent screen which projects the circuit image onto the camera lens. The camera reduces the image 20.5 to about 28 times. Under correct aperture and exposure time, the camera exposes the glass plate which is coated on one side by a light sensitive emulsion. The plate is then developed using a special developing process. The reduction camera is located in Rm. B420 Engr. Bld.

The proceedure for using the reduction camera is as follows:

1. Obtain the following list of materials;
   a. Mild window cleaning solution and soft cloth.
   b. Tape. (preferably masking tape)
   c. Rubylith pattern.
   d. 35' three prong extension cord.
   e. Camera lens mounted in a cubical bracket.
   f. Photo sensitive glass plates. These are 2" x 2" high resolution plates which are stored under refrigeration.*
   g. Wafer test plate with predeveloped pattern where the exact distance between two pattern edges is known.
   h. Assorted optical elements for view finder.
   i. Key for the camera room. (Rm B420 Engr. Bld.)
   j. A light tight case to store exposed glass plates.

   * The glass plates should be allowed to warm to room temperature before using to prevent uneven exposure density.

2. Upon entering the camera room, note the location of the reduction camera against the North wall then lock the door to prevent anyone from accidentally entering the room during exposure. It is a good idea to make a large, noticeable sign to be placed on the outside of the door to inform everyone that **"exposure is in progress"** and that the door should not be opened for any reason.

3. Turn off all lights momentarily and check for light leaks.

4. There are two screens associated with the current set-up of the reduction camera. One screen is mounted at the end of the camera adjustment rails and is not used for large scale reductions of this type. Open the two latches on the edge of the hinged glass plate and swing this portion out of the way. Remove the board insert and set aside for the duration of this procedure. The screen used for large scale reductions, i.e. 20.5 to 28 times reduction, has a green translucent covering and is located against the East wall of the room. After plugging in the screen, turn it on and gently clean the

screen with the window cleaner to remove any spots or old tape marks being sure not to scratch the plastic screen surface.

5. Remove the camera lens compartment dust cover and insert the camera lens in the opening with the shutter release extending out of the compartment.

6. Open the aperture to its widest setting (f.9), cock the shutter and trip the shutter release once to open the shutter.

7. Place the glass test pattern in the camera plate holder with the emulsion side facing the screen and adjust the horizontal and vertical controls until the screen image is centered on the glass plate.

8. Using the optics and the view finder, focus the view finder on the emulsion side of the glass plate. The test pattern should be in focus.

9. Adjust the camera lens position to provide the correct amount of reduction between the screen and the glass plate. One way to accomplish this is as follows:

   By varying the distance of the camera to the screen and by placing two pieces of tape on the screen determine the exact position of the lens on the camera mount such that the known pattern spacing on the test plate when multiplied by the correct reduction factor corresponds to the distance between the two tape strips on the screen. Remember that the tape strips must be in focus at the same image plane as the emulsion side of the glass plate. This step is crucial to insure proper strip widths and lengths of the final microstrip circuit.

   After the correct lens position is obtained, lock the lens mount in place with the pull lever and recheck all focusing adjustments.

10. Tape the rubylith pattern in the center of the screen with the clear backing side against the screen. Position

the tape at points around the perimeter to insure contact between the pattern and the screen at all points.

11. Set the camera aperture to f.22 and cock the shutter to the completely cocked position.
12. Position the unopened box containing the unexposed glass plates in a familiar position easy to reach in total darkness.

Note: When the box is opened in the dark, the emulsion side of the glass plates may be found by feeling around the edge of the glass holder insert for a small pointed ridge. (See figure 3.1) The ridge points in the direction of the emulsion coated side of the plates.

13. Place the light tight case used to store the exposed mask in a position close to the camera plate holder where it can be reached in total darkness.

Note: Practice the following steps a few times since they will involve movement in total darkness.

14. Turn off all lights including the screen light.

15. Remove one plate from the box containing the unexposed plates keeping track of the emulsion side of the plate then **CLOSE** the box.

16. Place the glass plate in the camera plate holder with the emulsion side facing the screen and close the holder cover. Be careful not to scratch the emulsion during this step.

17. Turn on the screen light.

18. Trip the shutter open and expose the plate for 5 minutes then trip the shutter closed.

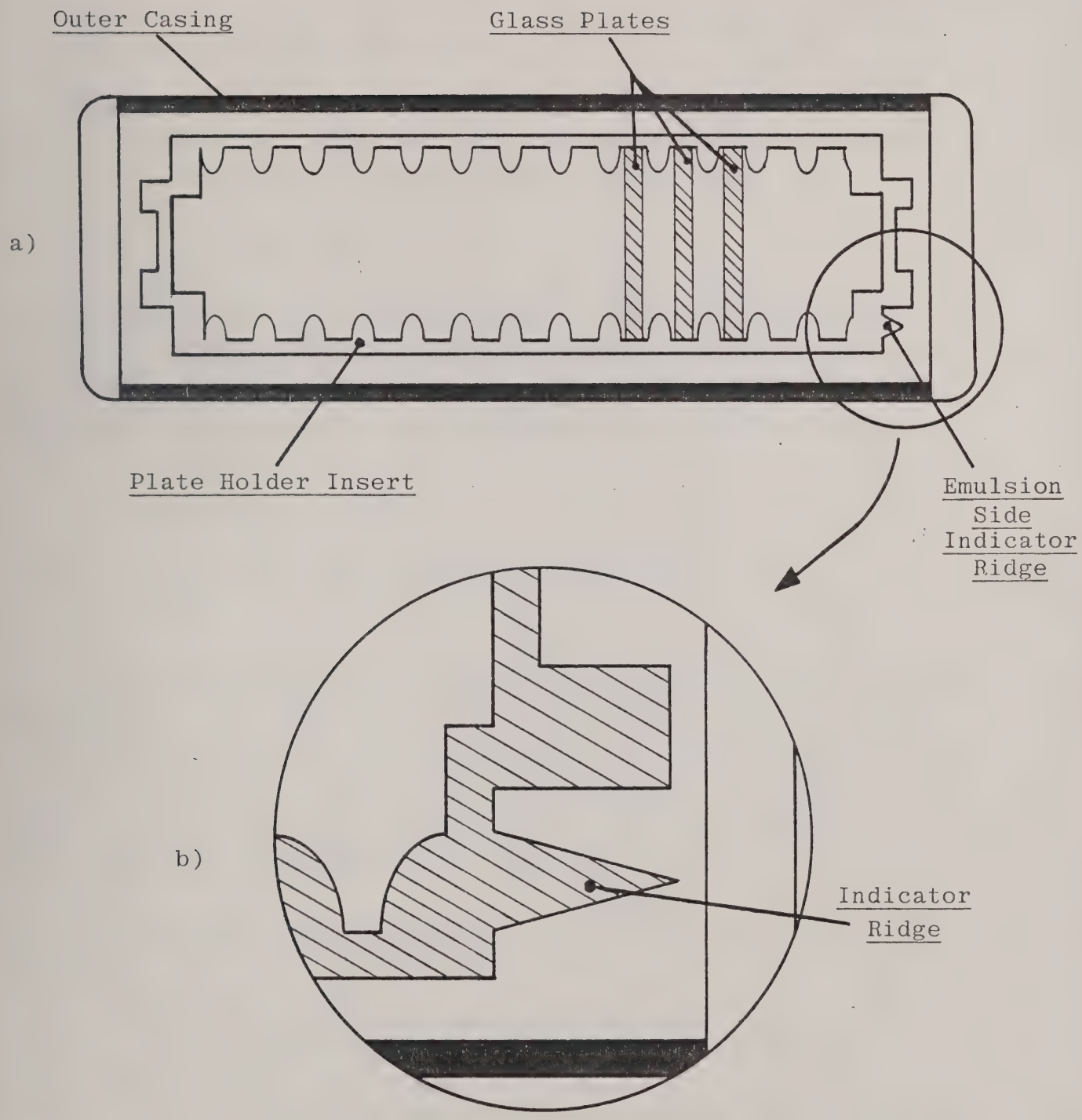

Figure 3.1--- a) Glass plate holder, top view. b) Enlarged view with emulsion indicator ridge.

19. Turn off the screen light.

20. Carefully remove the glass plate and place it in the light tight case. Be sure to remember the orientation of the emulsion side of the plate in the case.

21. Turn on the lights again.

When finished using the camera, replace the lens compartment cover, the short range screen insert and hinged glass cover, cover the camera with the plastic covering to keep it free of dust and dirt, remove all tape from the screen, and be sure all lights are out when leaving the room. Don't forget to lock the room.

Unit 4. Developing The Glass Mask.

Developing the glass plates involves approximately the same technique as developing a role of film except for a few minor differences. After all solutions have been mixed and placed in shallow dishes, the plates are rinsed, developed, rinsed, fixed, and then rinsed once more. The final step involves removing all water droplets from the surface with a Methanol and water bath. The dark room is located in Rm. 2553 Engr. Bld.

The procedure for developing the exposed glass plates is as follows:

1. Obtain the following list of materials:
   a. Five shallow glass dishes. Small Pyrex petri dishes work well.
   b. 1/2 liter of distilled water. This may be labeled as D.I. H_2O.
   c. Kodak D-19 developer.
   d. Kodak Rapid fixer (solution A).
   e. Fixer hardener (solution B).
   f. Timing clock.
   g. 10 ml graduated cylinder.
   h. Mild dish detergent.
   i. Plastic squeeze bottles of distilled water and Methanol.

2. Clean all dishes and beakers with a little detergent.

3. Place the light tight box containing the exposed glass plates, the five petri dishes and the timing clock in a position where they can be reached easily in the dark. Be sure to orientate the box such that the emulsion side of the plates is known.

4. Mix the following ratio of D-19 developer powder and D.I. H_2O in a small beaker by first, heating the D.I. H_2O to about 52 ^oC and then second, slowly add the D-19 powder under constant agitation.

(D-19 developer)	:	(D.I. H_2O)
595 g	:	3.8 litres

Suggested solution amounts: 9.4 g of D-19 powder
60.0 ml of D.I. H_2O

Note: This is enough mixture to develope two plates.

5. Pour approximately 30 ml of the D-19 developer in one dish and allow to cool to about 20 ^oC.

6. Mix the following ratio of distilled water, fixer (solution A), and hardener (solution B) in another dish. The resulting solution may turn cloudy when mixed but will cause no bad side affects.

(D.I. H_2O)	:	fixer (sol. A)	:	hardener (sol. B)
20	:	10	:	1

Suggested solution amounts: 20 ml D.I. H_2O
10 ml fixer (sol. A)
1 ml hardener (sol. B)

7. Pour approximately 30 ml of distilled water in each of the remaining three dishes.

8. Place all dishes in the following order from left to right:

---

pre-rinse, D-19, D-19 rinse, fixer, final rinse.

Be sure the dishes may be reached in order in total darkness.

9. Set the timer for 5 & 1/4 mins.

Note: The next few steps are done in total darkness. The following time schedule should be memorized before proceeding.

10. Turn off the lights.

11. Place the glass plate to be developed, always with the emulsion side up, in the dishes according to the following time schedule:

Pre-rinse	1 min.
D-19	4 & 1/4 mins.
D-19 rinse	30 secs.
fixer	45 secs.
final rinse	15 mins.

The clock alarm will sound after the pre-rinse and D-19 stages and should be reset to about 17 mins. and restarted at the D-19 rinse stage. Slowly agitate the dishes during all stages with only 1 min. of agitation required for the final rinse stage.

Note: In the event there is more than one undeveloped

plate in the ligh tight casing be sure to reclose the case right after taking out the plate to be developed.

12. Turn on the lights after 1 min. of the final rinse stage.

13. While in the final rinse stage, clean three of the dishes with the detergent and dry.

14. To remove all excess water the plate is cleaned with distilled water and Methanol. Mix the two liquids according to the following ratios and pour each mixture in the three clean dishes.

	(Methanol)	:	(D.I. H_2O)
Mixture A.	1	:	2
Mixture B.	1	:	1
Mixture C.	1	:	0

15. Arrange the dishes in the mixture order A, B, C, from left to right.

16. After the final rinse stage, Place the plate in the three mixtures according to the following time schedule:

Mixture A.	45 secs.
Mixture B.	45 secs.
Mixture C.	45 secs.

17. Finally, Place the developed glass mask back in a protective box or wrap in a tissue. Care should be taken not to scratch the emulsion from this point on.

18. Reclean all dishes and beakers, return all chemicals and supplies to their proper storage place, and leave darkroom in the same clean condition as it was upon entering.

Unit 5. Preparation Of The Wafer With Photo Resist And The Spinner.

In order for the wafer, somtimes referred to as the chip, to be patterned as a microstrip circuit the wafer must be covered with a thin film of photo resist.* This is accomplished through the use of a spinner which insures a uniform coating. The rotation speed is controlled such that slower speeds result in a thicker coat and faster speeds yield a thinner coating. When exposed to ultraviolet light via the mercury lamp in a mask aligner, a portion of the photo resist becomes exposed and is removed in the following developing stage. The unexposed portion is polymerized during the baking stage and hence is protected from the etching chemicals. The "clean" room located in Rm. 2436 Engr. Bld. contains many of the required supplies for this procedure. There are a few rules which must be followed when using this clean room:

1. No shoes allowed in clean room.
2. Keep doors and curtains closed.
3. Never turn off ceiling fan.
4. Keep the flow bench running at all times.
5. When finished, fill in log book.

* The photo resist currently being used is AZ-1350-B or Microposit positive resist which is red in color.

The procedure for spinning photo resist on a wafer is as follows:

1. Obtain the following materials:
   a. Tweezers.
   b. Pyrex petri dish with cover.
   c. Wafer(s) to be spun.
   d. Light tight case.
   e. Less than 1" outer diameter rubber washer.

2. Turn on N_2 tank valve. Adjust the output valve to 10 psi. This is the N_2 blower supply.

3. After entering clean room, Turn on the flow bench table light and turn on the N_2 blower valve located on the South wall.

4. Turn on both glove box blower and vacuum switches.

Note: The vacuum switch should be off any time the spinner chuck vacuum is not in use. This increases the lifetime of the vacuum system.

5. Turn oven on and set temperature between 85 and 90 ^{o}C. The middle switch position is off and the upper position is on.

6. Turn on spinner fan and light above glove box.

7. Place plastic spray cups around spinner chuck.

8. Turn on spinner power and set for a rotation speed of 1000 rpm. This corresponds to the dial pointing towards the far left slash mark. The rpm scale is not accurate.

9. Set the R/S switch to the 1 sec. setting and adjust the spin time knob for a spin time of 15 secs.

10. Fill syringe with approximately 1 cc of photo resist.

Note: Never pour extracted photo resist back into the photo resist supply bottle as it will contaminate the resist.

At this point the wafer must be placed on the spinner vacuum chuck. Wafers are usually sealed in dust free pouches. In the event a nonprotected wafer is used or the wafer must be precleaned before spinning, follow the "Wafer And Photo Resist Cleaning Procedure" before placing on chuck.

Note: Never touch wafer with fingers as finger grease can not be removed from the metal surface. Always use a tweezers and pick up wafer at corners only since they rarely are used in the microstrip layout.

Since microstrip circuits require a ground plane the photo resist must be spun on both sides of the wafer. The resist spun on the top is exposed to light to make the desired circuit pattern. The resist spun on the bottom will prevent etching of the surface metal used as a ground plane. Two layers of photo resist should first be spun on the bottom each followed by a soft bake. Then, the top layer is spun followed by another soft bake. A "soft" bake refers to a baking process which does not polymerize the resist whereas a "hard" bake refers to a procedure where the wafer is baked at a higher temperature resulting in polymerization of the photo resist.

11. Place wafer on vacuum chuck and turn on the spinner vacuum switch. The vacuum gauge should show a vacuum reading of at least 15.

12. Apply the photo resist to the center of the wafer until it spreads out to approximately 1/4 inch from the edge. The resist should not be allowed to run over the edge as this will cause excess deposits of resist on the other side.

13. Start the spinner with the red start button. It should spin for approximately 15 secs.

14. After the wafer has stopped spinning, turn off spinner vacuum, grasp the wafer by the corner with the tweezers and place in the Pyrex dish.

Note: Do not use a plastic dish as it will melt in the oven.

15. Bake the wafer in the oven for 10 mins. at 85 to 90 ^{o}C.

16. To insure a thick coating of photo resist to protect the bottom metal surface, repeat steps 10 through 15 to spin a second coat of photo resist on the bottom then proceed to step 17.

17. Place the rubber washer on the vacuum chuck. This will provide a smooth surface on which to place the wafer bottom preventing any damage to the prespun resist. This washer should be smooth and pliable enough to still allow the vacuum gauge to reach a reading of 15.

18. Place the wafer on the washer with the prespun side down and repeat steps 10 through 15 to spin the top of the wafer.

Note: From this point on extreme care should be exercised not to scratch the photo resist on either top or bottom as stray metal spots or unwanted breaks in the circuit lines may result. The wafer should be kept away from chemicals such as Acetone which is used as a solvent to remove photo resist.

19. Place the covered Pyrex dish containing the finished wafer in the light tight case.

20. Using a little Acetone and a Q tip swab, clean the spinner chuck of all photo resist.

21. Discard excess photo resist in syringe and clean syringe and plastic spray cups with Acetone. The cleaning may be performed in the Thin Film Lab in room 2439 Engr. Bld.

22. Turn off; spinner vacuum, power, fan, light, N_2 blower valve, system vacuum and blower switches, oven, and finally, the flow bench light. Double check to make sure the vacuum switch is off!

23. Be sure the curtains and doors are shut on the clean room when finished.

Wafer and Photo Resist Cleaning Procedure.

In the event the wafer must be cleaned before resist spinning or the spinning process must be repeated, the following procedure lists the steps involved for cleaning the wafer.

1. Obtain the following materials:
   a. Plastic squeeze bottles of Acetone and Methanol.
   b. Tweezers.
   c. N_2 blower.
   d. Excess solution dump dish.

2. Turn on N_2 tank valve. Adjust the output valve to 10 psi.

3. Using tweezers to hold the wafer over dump dish, wash wafer free of photo resist with Acetone.

4. Rinse wafer with Methanol.

5. Blow wafer dry with N_2 blower.

6. Place cleaned wafer in Pyrex petri dish and cover.

7. Empty dump dish in sink and clean with a mild detergent.

8. Turn off N_2 supply.

Unit 6. Exposing The Wafer With The Mask Aligner.

The mask aligner is a device which accurately aligns the wafer under the glass mask and then exposes the wafer to a source of ultraviolet light. The light is provided by a mercury lamp housed in the rear of the unit.

The following steps indicate the correct procedure for using the mask aligner currently located in the "screen" room of 3559 Engr. Bld. In case the "screen" room is not darkened from stray ultraviolet light, some form of light curtains should be hung up. The room does not have to be light tight but should be somewhat dark to prevent excess ultraviolet light from pre-exposing the

wafer.

1. Obtain the following materials:
   a. Glass mask containing the desired circuit pattern.
   b. Prepared wafer stored in a light tight case.
   c. Tweezers.
   d. Lens cleaning paper.
   e. Spacing washer.

2. Turn on the N_2 tank valve. Adjust the output valve to 50 psi.

3. Extend the vacuum pump exhaust hose out an open window.

4. Upon entering the "screen" room, close the door, and blind all outside light.

5. Turn on the overhead lamp & mask aligner power switch and plug in the vacuum pump. Adjust the external aligner N_2 valve to 50 psi.

6. Manually lift the head to the full upright position and place the glass mask in the metal holder with the emulsion side down. The mask should fit securely into the white pliable seal of the mask holder. Care should be taken not to damage this seal. After the mask is secure in the white seal, press down on the corners of the mask until the small vacuum gauge located on the lower left panel indicates a small amount of vacuum. A reading of 5 or higher is desirable. A poor seal of the mask in the metal mask holder will result in unwanted movement of the wafer beneath the mask while in contact mode.

7. Place the holder in the position slots and secure in place with the black clamp ring.

8. With slight pressure applied to the clamp ring, turn on the clamp switch located at the left and check for a secure clamp ring fit.

9. Cycle the turn table contaning the vacuum chuck to the front position by using the table turn button located at the left, place the spacing washer on the center of the

chuck, then, with the tweezers place the wafer on the washer and check for good wafer vacuum. A spacing washer is required with this aligner to position the wafer close enough to the mask when the wafer is cycled between contact and seperate modes.

10. Cycle the turn table to the rear position and press the red contact button located on the manipulator. This will bring the chuck and wafer up in contact with the glass mask. Contact is indicated by the lighting of the red contact LED located at the right of the manipulator. After approximately 1 sec. the chuck will drop into separate mode and the green LED will light while the red light goes out.

11. In separate mode, the manipulator may be used in to position the wafer in the correct position under the mask. Press and hold the scan button located on the left while moving base plate to move the entire chuck and mask assembly together. With the scan botton released, moving the manipulator while pressing the white button allows large scale motion of the wafer under the mask. Moving the manipulator without pressing any buttons results in very fine wafer adjustment. The rotation knob at the front left of the base plate may be used in separate mode to rotate the wafer under the mask as much as $\underline{5}^{o}$ either direction.

    Note: The wafer may not be moved under the mask while in contact mode but the scan feature works in either contact or separate mode.

12. Turn on the mercury lamp power switch, ignite the lamp with the lamp start switch and allow to warm up for $\underline{5}$ mins. Try to shield as much stray ultraviolet light from the wafer as possible.

```
* * * * * * * * * * * * * * * * * * * * * * * * * * * * * * * * *
*                                                                 *
*  Caution: Do not look directly at the ultraviolet               *
*           light or severe eyesight damage may result.           *
*                                                                 *
* * * * * * * * * * * * * * * * * * * * * * * * * * * * * * * * *
```

13. After approximate aligning of the wafer and mask in separate mode, press the red contact button to bring the wafer up in contact. Lower the head and then, using the optics provided, focus on the surface of the metal cladding then use the scan feature to recheck wafer alignment. Pressing the red button on the manipulator cycles the wafer between contact and separate modes for realignment if necessary.

Note: If the wafer shifts under the mask while in contact mode or if the wafer moves slightly under the mask when cycling between contact and separate modes, check the small vacuum gauge on the left panel for a vacuum reading of any amount. In the event there is no reading, press down on the corners of the mask to allow a good mask seal. This should cause a rise in the vacuum gauge reading to about 5 or more and should correct the problem.

14. The aligner may be returned to the reset mode at any time by pressing the reset button located on the left. In the reset mode the chuck will drop away from the mask where it may be tuned to the forward position using the turn table button.

15. Set the exposure time for 20 sec. and press the expose button located to the left. The head will raise and extend forward. The aperture will open and expose the wafer for the set time. Then, the head will return to the retracted position and the chuck will drop as the aligner returns to the reset mode.

16. Turn off the mercury lamp.

Note: Refrain from turning the mercury lamp on and off frequently as it reduces the lamp lifetime. Allow at least a 20 min. cool down time before reigniting the lamp.

17. Cycle the table to the forward position, and place the exposed wafer in the light tight case for future developing.

18. Remove the glass mask and reinsert the test mask in the holder.

19. Unplug the vacuum pump. Turn off the aligner power. Cover the aligner with the dust cover. Turn off the overhead lamp.

20. Turn off the N_2 tank valve and pull in the vacuum system exhaust tube.

Unit 7 Developing The Exposed Wafer.

To remove the exposed photo resist from the areas adjacent to the the microstrip lines, the wafer must be developed. This may be performed in the clean room in 2436 Engr. Bld. This is a relatively simple procedure and is described here:

1. Obtain the following materials:
   a. Exposed wafer.
   b. Plastic squeeze bottle of distilled water.
   c. AZ-Developer.
   d. 10 ml graduated cylinder.
   e. Small mixing dish.
   f. N_2 blower.

2. Turn on oven to 120 ^{o}C.

3. Mix a 1:1 solution of (D.I. H_2O) : (AZ-Developer) in the mixing dish. Approximately 15 ml of each should be sufficient.

4. Place wafer in mixture and agitate until the circuit lies are well defined and the unwanted photo resist has been removed. Be careful not to develope so long that the photo resist is removed from the circuit lines. This should take approximately 5 to 10 secs. to completely develope the wafer.

5. Rinse wafer with D.I. H_2O and blow dry with N_2.

6. Bake wafer in oven at 120 ^oC for 12 mins. This will make the remaining photo resist insensitive to light.

7. After baking, place wafer in Pyrex dish and cover.

8. Discard remaining developer mixture, clean dish and graduated cylinder, turn off oven and N_2 blower.

At this point the position of the microstrip lines relative to the edges of the substrate should be checked for alignment. In the event the circuit lines are skewed or otherwise improperly positioned, the wafer may be reused by cleaning the wafer as in the latter part of unit 5 and then repeating units 5 through 7.

Unit 8. Etching The Wafer.

The metal cladding usually found on alumina substrates is a combination of a thin layer of chromium under a thin layer of gold. After the photo resist has been removed from the areas surrounding the microstrip lines, the bare metal must be removed in the etching stage. First the gold will be etched then the chromium. However, since the metalization must be removed from the edge of the substrate but not from the bottom ground plane, the photo resist must be removed from the edge without disturbing the resist on the circuit lines or on the bottom surface metal. This is accomplished by carefully scraping the edge of the substrate with the edge of a X-ACTO knife. This effectively bares the edge metal to be etched by the chemicals.

```
* * * * * * * * * * * * * * * * * * * * * * * * * * * * * * * * * * * *
*                                                                       *
*    Note: Up to this point during the chip production, the             *
*          wafers may be reused by removing all photo resist            *
*          as in the wafer cleaning procedure.                          *
*                                                                       *
* * * * * * * * * * * * * * * * * * * * * * * * * * * * * * * * * * * *
```

All chemical mixtures should be mixed prior to beginning the etching procedure. The etching stage should be performed in the Solid State Chemical Lab., Rm. 2434 Engr. Bld.

1. Obtain the following materials:
   a. Two shallow Pyrex petri dishes.
   b. 10 ml graduated cylinder.
   c. Large supply of distilled water.
   d. Weighing scale.
   e. Small mixing beakers.

Gold Etching Solution.

2. Obtain the following chemicals:

   a. Iodine resublimed crystals AR; I_2

   b. Potassium iodide crystals ACS; KI

3. In a beaker, mix a solution of I_2KI in the ratio of:

I_2	KI	D.I. H_2O
1 g	2.7 g	5.3 ml

* Suggested solution amounts: 3.0 g of I_2
8.1 g of KI
15.9 ml of D.I. H_2O

4. Mix the total I_2KI solution with distilled water in the following ratio:

I_2KI	D.I. H_2O
1	2

* Suggested solution amounts: All of the I_2KI solution to 30 ml of D.I. H_2O

* The above suggested solution amounts will produce enough etching solution to etch 2 wafers. Half of the solution should be used for one wafer and the remaining half saved for the other wafer.

5. Agitate the solution thoroughly then pour the gold etch solution into one of the Pyrex mixing dishes and set aside. The mixed gold etching solution should be dark purple in color and be free of any undisolved chemicals.

Chromium Etching Solution.

6. Obtain the following chemicals:

   a. Ceric Ammonium Nitrate (CAN) ACS; $(NH_4)_2Ce(NO_3)_6$

   b. Glacial Acetic Acid NF; $C_2H_4O_2$

7. In a beaker, mix a solution of chromium etch in the ratio:

CAN	Acetic Acid	D.I. H_2O
180 g	45 ml	1000 ml

Suggested solution amounts:

5	g of CAN
1.25	ml of Acetic Acid
28	ml of D.I. H_2O

* Caution: The Glacial Acetic Acid is extremely concentrated and therefore is harmful if poured on skin and fatal if swollowed. Handle with care. Pour acid only under chemical vapor hood and only while wearing plastic gloves. Do not inhale fumes.

8. Agitate the solution thoroughly then pour into a second Pyrex dish and place next to the gold etch. The chromium etching solution should be yellowish in color and may be used for both wafers to be etched.

9. Place the wafer into the gold etch solution and agitate until all gold metal surrounding the circuit lines has disappeared. Then rinse with D.I. H_2O.

Note: It may take 25 mins. of constant agitation to completely remove the gold. Check the wafer frequently to be sure the circuit lines are not being etched by the solution.

When the gold has completely disappeared the wafer should have a glossy, chrome surface everywhere except along the microstrip circuit lines and the resist covered ground plane metal.

10. Place the wafer into the chromium etching solution and agitate until the chromium surface has disappeared leaving the white alumina substrate underneath.

Note: The change from chromium color to white will happen very fast. Usually around 10 seconds. After the chromium has vanished, Immediately rinse the wafer in D.I. H_2O. Delay at this stage may cause severe under cut of the chromium layer beneath the gold circuit lines.

11. Place the etched chip in a clean Pyrex dish and cover.

12. Dispose of all excess solution and clean all dishes and beakers with a detergent. Return all chemicals to their proper storage place.

Unit 9. Cleaning of the Finished Microstrip Circuit.

The last cleaning procedure removes all remaining photo resist and water spots from the etched wafer. The cleaning procedure is as follows:

1. Obtain the following materials:
    a. Plastic squeeze bottles of Acetone and Methanol.
    b. N_2 blower.
    c. Excess solution dump dish.

2. Turn on N_2 tank valve. Adjust the output valve to 10 psi.

3. Using tweezers to hold the wafer over dump dish, wash wafer top and bottom free of photo resist with Acetone. The remaining gold should be bright and shiny.

4. Rinse wafer with Methanol.

5. Blow wafer dry with N_2.

6. Place cleaned wafer in Pyrex dish and cover.

7. Empty dump dish in sink and clean with a mild detergent.

8. Turn off N_2 supply.

At this point, the finished chip should be examined for defects in the gold circuit pattern left on the substrate as well as the gold ground plane on the substrate bottom. The resolution of the entire chip production process can easily be checked under a microscope.

Appendix A. Chemicals And Material Supply Information

This section lists the locations where the chemicals and materials are stored and also all pertinent ordering information for restocking these items.

Materials

Ulano Rubylith RM3:

Location: This is stored in the "screen" room in 3559 Engr. Bld.

Supplier: Master Blue Print Inc.
810 Badger Rd.
Madison, Wis. 53713 Phone: (608) 256-4884

Size: 40" x 150"

Price: $29.95

High Resolution Photo Sensitive Plates:

Location: These are stored under refrigeration in the Duplication room, 2415 Engr. Bld.

Supplier: Imtech Products Inc.
1295 Forgwood Ave.
Sunnyvale, CA. 90086

Size: 2" x 2" high resolution glass plates.

Quantity: 30 plates per box.

Price: $20.00 per box.

Substrates:

Location: These are stored in the supply cabinet in Rm. 3559 Engr. Bld.

Model #: 15-2504-1210 AL_5 O_3 Alumina substrates with chromium/gold metalization.

Supplier: Tek-Wave Inc.
55 Charles Lindbergh Blvd.
Mitchel Field, N.Y. 11553

Size: 1" x 1" x 0.025" thick

Quantity: 12 per pkg.

Price: $28.75 ea. or $345.00 per pkg.

Chemicals

Kodak D-19 Developer:

Location: This is stored in the "screen" room in 3559 Engr. Bld.

Supplier: Available from UW stores.
Stock # 2957; sale unit: 1 gal.

Price: $2.9476 per gal.

Kodak Fixer:

Location: This is stored in the "screen" room in 3559 Engr. Bld.

Supplier: Available from UW stores.
Stock # 3027; sale unit: 5 gal.

Price: $15.7059 per 5 gal.

Photo Resist:

Location: This is stored in the "clean room" in Rm. 2436 Engr. Bld.

Model #: AZ-1350-B or Microposit 1300-17

Supplier: Shipley Co.
580 Bonnie lane
Elkgrove Village, Ill. 60003
Phone: (312) 956-6550

Quantity: 1 Qt.

Price: $84.00 per Qt.

AZ-Developer or Microposit Developer:

Location: This is stored in the "clean room" in Rm. 2436 Engr. Bld.

Supplier: Shipley Co.
580 Bonnie Lane
Elkgrove Village, Ill. 60003
Phone: (312) 956-6550

Quantity: 1 gal.

Price: $20.70 per gal.

Iodine Resublimed Crystals AR; I_2

Location: This is stored in the "screen" room in 3559 Engr. Bld.

Supplier: Available from UW stores.
Stock # 2340; sale unit: 1/4 Lb.

Price: $5.2926 per 1/4 Lb.

Potassium Iodide Crystals ACS; KI

Location: This is stored in the "screen" room in 3559 Engr. Bld.

Supplier: Available from UW stores.
Stock # 2504; sale unit: 500 grams.

Price: $9.9332 per 500 grams.

Ceric Ammonium Nitrate (CAN) ACS; $(NH_4)_2Ce(NO_3)_6$

Location: This is stored in the "screen" room in 3559 Engr. Bld.

Stock #: 16774-21-3

Supplier: Aldrich Chemical Co.
P.O. Box 355
Milwaukee, Wis. 53201

Quantity: 250 grams.

Price: $20.70

Glacial Acetic Acid NF; $C_2H_4O_2$

Location: This is stored in the "screen" room in 3559 Engr. Bld.

Supplier: Available from UW stores.
Stock # 2008; sale unit: 5 pts.

Price: $8.8967 per 5 pts.

A special thanks to:

Assistant editor **Tom McKay** for his contrabution of the reduction camera.

Assistant editor **Dave McGinnis** and **Gert Hohenwarter** for their "clean room".

Assistant editor **Yiwei Chen** for his help with the developing and etching instructions.

-and-

The rest of the members of Beyer Labs Inc. for their advice and insight into this procedure.

THIN FILM MICROSTRIP CIRCUIT
PRODUCTION MANUAL

Presented to James B. Beyer

University Of Wisconsin -- Madison
Department Of Electrical Engineering

Produced by Morgan K. Culver
August 1, 1984

Thin Film Microstrip Circuit Production

The following steps describe the procedure for design and production of thin film microstrip circuits on substrates such as alumina with gold/chromium metal cladding. The general procedure is as follows:

1. The first step involves designing the microstrip circuit including all line widths, lengths, and all other dimensions required for later circuit production. This step will determine the outer dimensions of the substrate on which the circuit will be etched.

2. Next, the layout is redrawn about twenty to twenty-eight times the actual dimensions and drawn to scale on a large piece of paper.

3. A large sheet of rubylith, the same size as the enlarged drawing, is then cut to the pattern of the circuit layout. Depending on which type of photo resist is used to etch the gold cladding, rubylith is removed from parts where the microstrip will appear and left untouched on the adjacent areas or visa versa.

4. The reduction camera exposes and reduces the pattern cut into the rubylith onto a glass plate which forms the mask used in the wafer etching process. This mask will be the actual size of the circuit.

5. After preparation of the wafer, photo resist is spun uniformly onto the wafer using a spinner where the rotation speed and resist thickness can be controlled accurately.

6. Next, the glass mask and the prepared wafer are placed in the mask aligner where the mask is aligned with the wafer. Then the mask and wafer are exposed to ultraviolet light. Certain areas of the wafer are protected from the light by the mask whereas the areas uncovered by the mask are exposed by the light.

7. The wafer is then developed to remove all exposed photo resist leaving the bare metalization uncovered. In this step the wafer is also baked to polymerize the unexposed resist and hence protect the underlying metal from being removed in the etching stage.

8. Using the correct etching chemicals the unwanted portion of the metal cladding is etched away leaving the micro-strip circuit pattern intact.

9. Finally the substrate is cleaned of any remaining photo resist and is then mounted in the device outer casing where all remaining elements, FET's, connectors, etc., are soldered into place.

In the material that follows, this generalized procedure is broken down into more specific steps which contain detailed information concerning the materials required, specific processes, and other information leading to the production of thin film microstrip circuits.

		Page
Unit 1. - - -	Making The Enlarged Scale Drawing.	4.
Unit 2. - - -	Cutting The Rubylith Pattern.	5.
Unit 3. - - -	Exposing The Glass Mask Using The Reduction Camera.	8.
Unit 4. - - -	Developing The Glass Mask.	12.
Unit 5. - - -	Preparation Of The Wafer With Photo Resist And The Spinner.	16.
Unit 6. - - -	Exposing The Wafer Using The Mask Aligner.	20.
Unit 7. - - -	Developing The Exposed Wafer.	24.
Unit 8. - - -	Etching The Wafer.	25.
Unit 9. - - -	Cleaning Of The Finished Microstrip Circuit.	28.
Appendix A. -	Chemicals And Material Supply Information.	30.

Unit 1. Making The Enlarged Scale Drawing.

The reason for making an enlarged scale drawing is to provide a pattern from which to cut the rubylith. Since the actual size of a microstrip line is very small, less than 1 mil (≈25 μm) in some cases, it is impossible to make an accurate mask without first enlarging the design on paper and then allowing the camera lens to make the critical reduction back to the original circuit size.

The operating limits listed below are imposed by the reduction camera:

Maximum enlarged drawing and rubylith size..... 21" x 30".
Maximun size of substrate which can be used..... 1" x 1.3".
Reduction factor range available..... 20.5X to 28X.

Most microstrip patterns that require thin film production are designed on substrates no bigger than 1" x 1" square. As an example; For a circuit to be realized on a 1" x 1" substrate, using the smallest reduction factor (20.5) the outer dimensions of the enlarged scale drawing should be about 20.5" x 20.5" square. Therefore, remembering that the largest drawing width allowed is 21", this example represents the approximate limits of operation using the reduction camera. Any smaller substrate or rubylith size may be used.

As a general rule; "The larger the reduction factor, the easier it is to realize very small line widths and the more accurate the enlarged scale drawing can be. The smaller the reduction factor, the larger the overall dimensions of the substrate can be." Hence, to realize 1 or 2 mil line widths on a smaller substrate, a larger reduction factor may be used but to use a full 1" x 1" substrate a smaller reduction factor must be used.

Keeping the previous constraints in mind, the steps for making the enlarged scale drawing are as follows:

1. Decide on the substrate size to be used.

2. Choose a reduction factor that falls within the con-

straints of the reduction system and does not magnify the outer dimensions of the substrate greater than 21" x 30".

3. Multiply the outer substrate dimensions by the chosen reduction factor and cut a large sheet of white paper to those dimensions. White construction paper works well for this step.

4. Multiplying each microstrip dimension by the reduction factor, carefully draw the circuit pattern on the paper. Use a drafting board or similar arrangement to allow an accurate reproduction of the circuit pattern. Also, use a dark soft leaded pencil or better yet, a black ink pen with a fine point since a drawing line that is too wide will result in reduced rubylith cutting accuracy.

5. Recheck all multiplications and dimensions on the enlarged drawing.

Unit 2. Cutting the Rubylith Pattern.

Rubylith is a translucent material composed of two sheets of plastic film back to back. One sheet is clear and is used as a backing. The other sheet is colored and is used to block light from passing through the rubylith. Red rubylith is required for the existing system since the screen of the reduction camera is green and the combination of this green light with the red film yields a black background and blocks out all light from passing to the camera lens. Therefore, the portion of the rubylith which still contains both layers of film will block the light and the portion where the red film has been removed (leaving only the clear backing) will pass the light.

After the large scale drawing has been completed the rubylith must be cut into the correct pattern. Depending on whether positive or negative photo resist is used for the etching stage, the red film must be removed either from the microstrip circuit lines or from the surrounding areas adjacent to the microstrip layout.

When positive photo resist is used: (See figure 2.1)

The rubylith must be cut such that the red film is removed from the areas where the microstrip circuit lines will be and not removed from the surrounding areas. The light that passes through the clear strips exposes the emulsion on the glass plate along the microstrip lines. The rubylith left on the area surrounding the circuit lines prevents the light from passing to the camera and therefore does not expose the emulsion on the glass plate.

The resulting glass mask will be dark along the circuit lines and clear everywhere else.

After the positive photo resist has been spun on the wafer and the aligning has been accomplished, the wafer is exposed to ultraviolet light. The subsequent developing stage then removes photo resist on the exposed areas surrounding the microstrip circuit lines. Baking the wafer polymerizes the photo resist not exposed to the light and hence protects the metal cladding from being etched.

Chemicals then etch the bare metalization where the photo resist has been removed leaving the metal cladding untouched on the microstrip lines.

```
* * * * * * * * * * * * * * * * * * * * * * * * * * * * * * * * * * * *
*                                                                       *
*  NOTE:  The existing chip production system utilizes                  *
*         positive photo resist and the rubylith should                 *
*         be cut accordingly.  Under the assumption the                 *
*         current set-up will be used in the future, the                *
*         remaining material in this manual describes the               *
*         production process using positive photo resist.               *
*         However, the same procedure applies if negative               *
*         photo resist is used with the rubylith cut                    *
*         according to the following paragraphs.                        *
*                                                                       *
* * * * * * * * * * * * * * * * * * * * * * * * * * * * * * * * * * * *
```

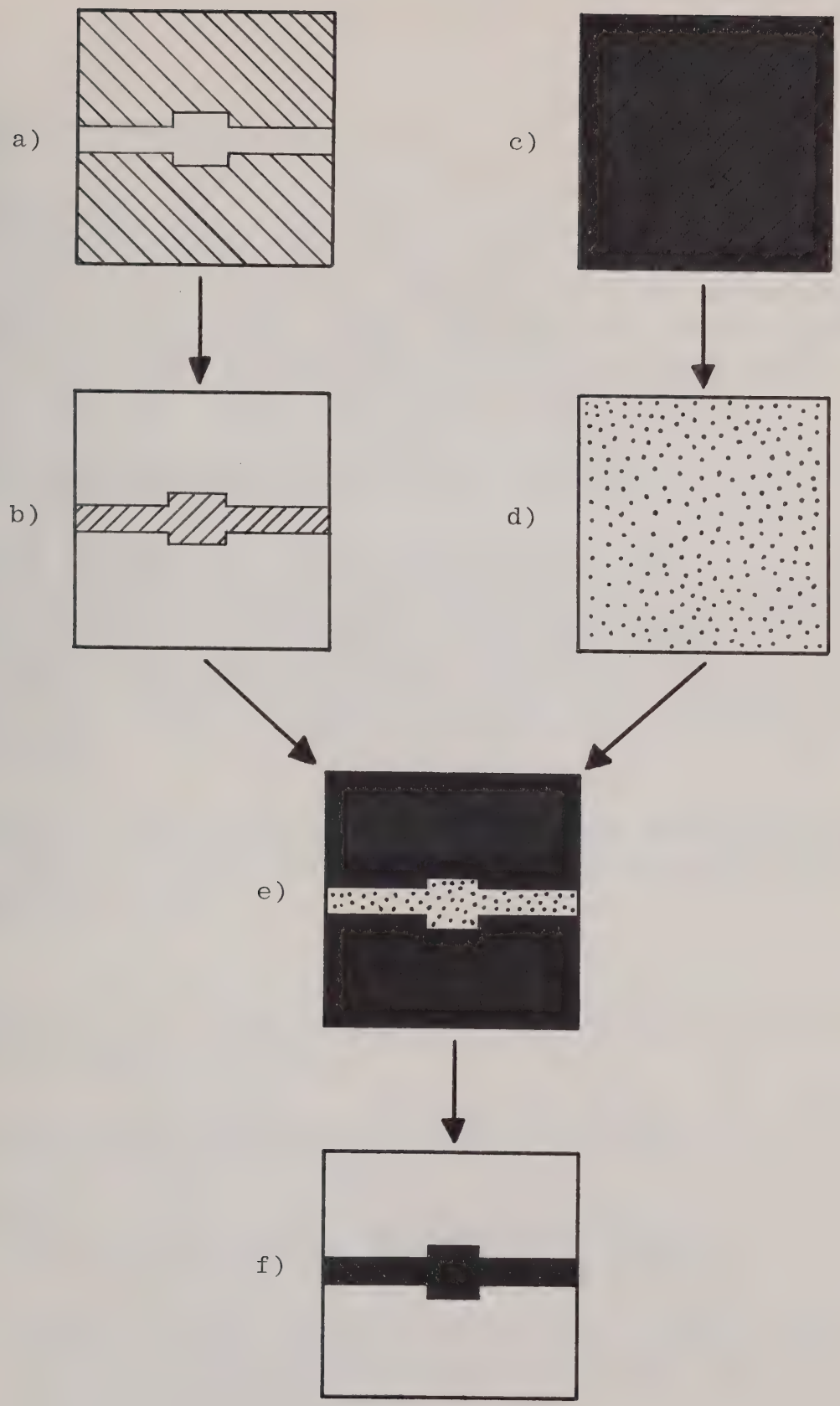

Figure 2.1--- a) Rubylith pattern. b) Exposed glass mask. c) Uncoated wafer. d) Wafer with photo resist coating. e) Wafer after exposing and developing stage. e) Etched microstrip circuit.

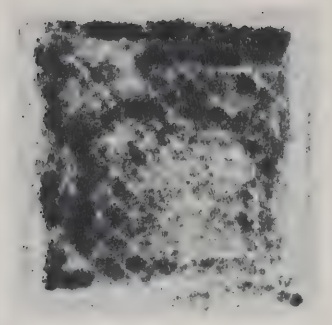

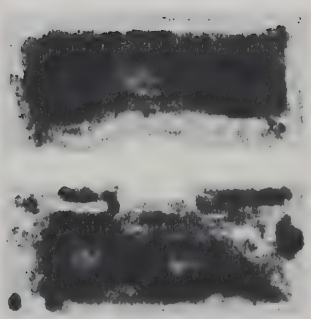

When negative photo resist is used:

The rubylith must be cut such that the red film is not removed from the areas where the microstrip circuit lines will be and is removed from the surrounding areas. The light that passes through the clear area exposes the emulsion on the glass plate surrounding the microstrip lines. The rubylith left along the circuit lines prevents the light from passing to the camera and therefore does not expose the emulsion on the glass plate.

The resulting glass mask will be clear along the circuit lines and dark everywhere else.

After the negative photo resist has been spun on the wafer and the aligning has been accomplished, the wafer is exposed to ultraviolet light. The subsequent developing stage then removes photo resist on the unexposed areas surrounding the microstrip circuit lines. Baking the wafer polymerizes the photo resist exposed to the light and hence protects the metal cladding from being etched.

Chemicals then etch the bare metalization where the photo resist has been removed leaving the metal cladding untouched on the microstrip lines.

The following steps indicate the correct procedure for making the rubylith pattern:

1. Cut a large piece of rubylith the same size as the enlarged scale drawing.

2. Making sure the red film side is up, tape the rubylith over the drawing to a smooth cutting surface.

3. Using a straight edge and X-ACTO knife, lightly trace all circuit patterns being careful to only cut through the red film and not the clear backing.

Note: In the event some of the circuit lines must extend to the edge of the wafer, be sure to cut these

lines all the way to the edge of the rubylith. However, in the event the outer casing, sometimes referred to as the "carrier," will be close enough to the finished circuit boards to cause excessive parasitic coupling between the end of a microstrip line and the carrier, the microstrip should not be allowed to extend to the end of the substrate. Instead, the rubylith should be cut such that the actual line length stops approximately 2 mm to 3 mm short of the edge of the substrate. In the event these lines will be used as input or output lines, the microstrip lines should extend just far enough to allow the connector center conductor to reach the circuit line.

4. Strip away the red film from the circuit line area. This may be accomplished by sliding the point of the knife under the edge of the film (preferably at a corner) and then pulling gently.

5. The rubylith should be kept free of dust and dirt. Rolling it inside the scale drawing paper works well.

Unit 3. Exposing The Glass Mask Using The Reduction Camera.

The microstrip pattern is transferred onto a glass plate also known as the "mask" via the reduction camera. The optical properties of the camera allow symetric reduction of the enlarged circuit pattern down to actual size.

The rubylith pattern is mounted to a green luminescent screen which projects the circuit image onto the camera lens. The camera reduces the image 20.5 to about 28 times. Under correct aperture and exposure time, the camera exposes the glass plate which is coated on one side by a light sensitive emulsion. The plate is then developed using a special developing process. The reduction camera is located in Rm. B420 Engr. Bld.

The proceedure for using the reduction camera is as follows:

1. Obtain the following list of materials;
   a. Mild window cleaning solution and soft cloth.
   b. Tape. (preferably masking tape)
   c. Rubylith pattern.
   d. 35' three prong extension cord.
   e. Camera lens mounted in a cubical bracket.
   f. Photo sensitive glass plates. These are 2" x 2" high resolution plates which are stored under refrigeration.*
   g. Wafer test plate with predeveloped pattern where the exact distance between two pattern edges is known.
   h. Assorted optical elements for view finder.
   i. Key for the camera room. (Rm B420 Engr. Bld.)
   j. A light tight case to store exposed glass plates.

   * The glass plates should be allowed to warm to room temperature before using to prevent uneven exposure density.

2. Upon entering the camera room, note the location of the reduction camera against the North wall then lock the door to prevent anyone from accidentally entering the room during exposure. It is a good idea to make a large, noticeable sign to be placed on the outside of the door to inform everyone that **"exposure is in progress"** and that the door should not be opened for any reason.

3. Turn off all lights momentarily and check for light leaks.

4. There are two screens associated with the current set-up of the reduction camera. One screen is mounted at the end of the camera adjustment rails and is not used for large scale reductions of this type. Open the two latches on the edge of the hinged glass plate and swing this portion out of the way. Remove the board insert and set aside for the duration of this procedure. The screen used for large scale reductions, i.e. 20.5 to 28 times reduction, has a green translucent covering and is located against the East wall of the room. After plugging in the screen, turn it on and gently clean the

screen with the window cleaner to remove any spots or old tape marks being sure not to scratch the plastic screen surface.

5. Remove the camera lens compartment dust cover and insert the camera lens in the opening with the shutter release extending out of the compartment.

6. Open the aperture to its widest setting (f.9), cock the shutter and trip the shutter release once to open the shutter.

7. Place the glass test pattern in the camera plate holder with the emulsion side facing the screen and adjust the horizontal and vertical controls until the screen image is centered on the glass plate.

8. Using the optics and the view finder, focus the view finder on the emulsion side of the glass plate. The test pattern should be in focus.

9. Adjust the camera lens position to provide the correct amount of reduction between the screen and the glass plate. One way to accomplish this is as follows:

   By varying the distance of the camera to the screen and by placing two pieces of tape on the screen determine the exact position of the lens on the camera mount such that the known pattern spacing on the test plate when multiplied by the correct reduction factor corresponds to the distance between the two tape strips on the screen. Remember that the tape strips must be in focus at the same image plane as the emulsion side of the glass plate. This step is crucial to insure proper strip widths and lengths of the final microstrip circuit.

   After the correct lens position is obtained, lock the lens mount in place with the pull lever and recheck all focusing adjustments.

10. Tape the rubylith pattern in the center of the screen with the clear backing side against the screen. Position

the tape at points around the perimeter to insure contact between the pattern and the screen at all points.

11. Set the camera aperture to f.22 and cock the shutter to the completely cocked position.
12. Position the unopened box containing the unexposed glass plates in a familiar position easy to reach in total darkness.

Note: When the box is opened in the dark, the emulsion side of the glass plates may be found by feeling around the edge of the glass holder insert for a small pointed ridge. (See figure 3.1) The ridge points in the direction of the emulsion coated side of the plates.

13. Place the light tight case used to store the exposed mask in a position close to the camera plate holder where it can be reached in total darkness.

Note: Practice the following steps a few times since they will involve movement in total darkness.

14. Turn off all lights including the screen light.

15. Remove one plate from the box containing the unexposed plates keeping track of the emulsion side of the plate then **CLOSE** the box.

16. Place the glass plate in the camera plate holder with the emulsion side facing the screen and close the holder cover. Be careful not to scratch the emulsion during this step.

17. Turn on the screen light.

18. Trip the shutter open and expose the plate for 5 minutes then trip the shutter closed.

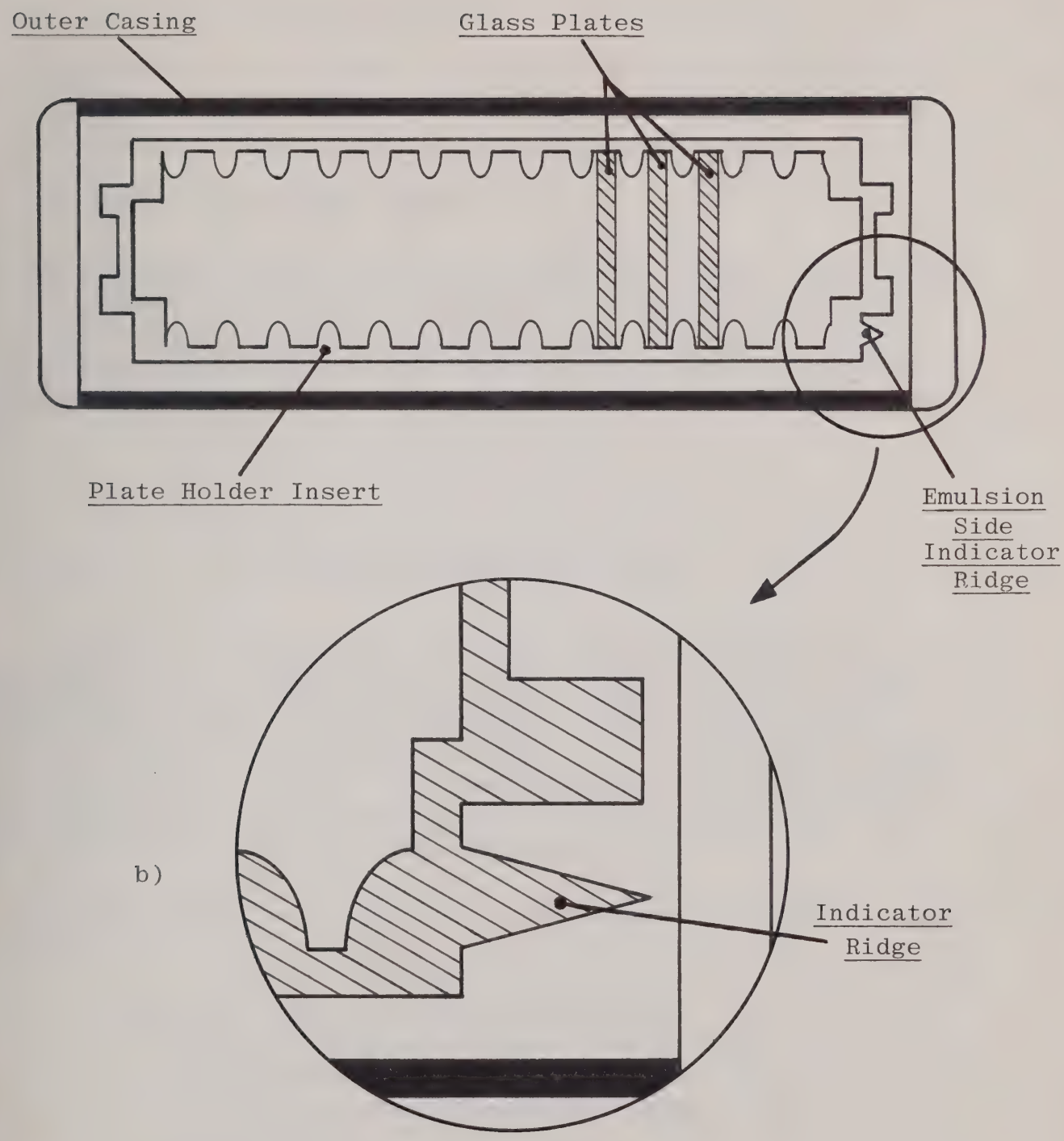

Figure 3.1--- a) Glass plate holder, top view. b) Enlarged view with emulsion indicator ridge.

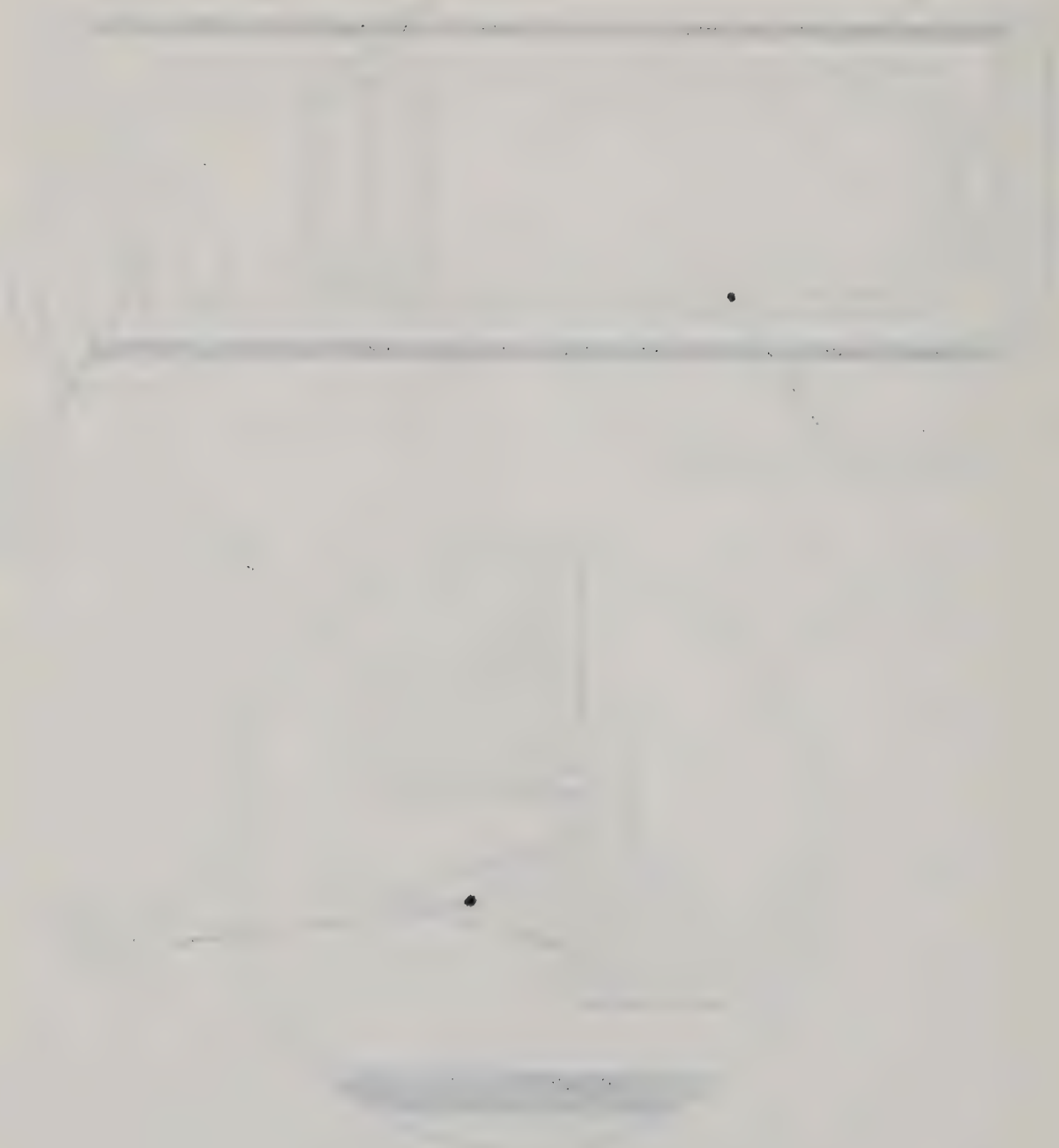

19. Turn off the screen light.

20. Carefully remove the glass plate and place it in the light tight case. Be sure to remember the orientation of the emulsion side of the plate in the case.

21. Turn on the lights again.

When finished using the camera, replace the lens compartment cover, the short range screen insert and hinged glass cover, cover the camera with the plastic covering to keep it free of dust and dirt, remove all tape from the screen, and be sure all lights are out when leaving the room. Don't forget to lock the room.

Unit 4. Developing The Glass Mask.

Developing the glass plates involves approximately the same technique as developing a role of film except for a few minor differences. After all solutions have been mixed and placed in shallow dishes, the plates are rinsed, developed, rinsed, fixed, and then rinsed once more. The final step involves removing all water droplets from the surface with a Methanol and water bath. The dark room is located in Rm. 2553 Engr. Bld.

The procedure for developing the exposed glass plates is as follows:

1. Obtain the following list of materials:
   a. Five shallow glass dishes. Small Pyrex petri dishes work well.
   b. 1/2 liter of distilled water. This may be labeled as D.I. H_2O.
   c. Kodak D-19 developer.
   d. Kodak Rapid fixer (solution A).
   e. Fixer hardener (solution B).
   f. Timing clock.
   g. 10 ml graduated cylinder.
   h. Mild dish detergent.
   i. Plastic squeeze bottles of distilled water and Methanol.

2. Clean all dishes and beakers with a little detergent.

3. Place the light tight box containing the exposed glass plates, the five petri dishes and the timing clock in a position where they can be reached easily in the dark. Be sure to orientate the box such that the emulsion side of the plates is known.

4. Mix the following ratio of D-19 developer powder and D.I. H_2O in a small beaker by first, heating the D.I. H_2O to about 52 ^oC and then second, slowly add the D-19 powder under constant agitation.

(D-19 developer)	:	(D.I. H_2O)
595 g	:	3.8 litres

Suggested solution amounts: 9.4 g of D-19 powder
60.0 ml of D.I. H_2O

Note: This is enough mixture to develope two plates.

5. Pour approximately 30 ml of the D-19 developer in one dish and allow to cool to about 20 ^oC.

6. Mix the following ratio of distilled water, fixer (solution A), and hardener (solution B) in another dish. The resulting solution may turn cloudy when mixed but will cause no bad side affects.

(D.I. H_2O)	:	fixer (sol. A)	:	hardener (sol. B)
20	:	10	:	1

Suggested solution amounts: 20 ml D.I. H_2O
10 ml fixer (sol. A)
1 ml hardener (sol. B)

7. Pour approximately 30 ml of distilled water in each of the remaining three dishes.

8. Place all dishes in the following order from left to right:

---

pre-rinse, D-19, D-19 rinse, fixer, final rinse.

Be sure the dishes may be reached in order in total darkness.

9. Set the timer for 5 & 1/4 mins.

Note: The next few steps are done in total darkness. The following time schedule should be memorized before proceeding.

10. Turn off the lights.

11. Place the glass plate to be developed, always with the emulsion side up, in the dishes according to the following time schedule:

Pre-rinse ..... 1 min.
D-19 ..... 4 & 1/4 mins.
D-19 rinse ..... 30 secs.
fixer ..... 45 secs.
final rinse ..... 15 mins.

The clock alarm will sound after the pre-rinse and D-19 stages and should be reset to about 17 mins. and restarted at the D-19 rinse stage. Slowly agitate the dishes during all stages with only 1 min. of agitation required for the final rinse stage.

Note: In the event there is more than one undeveloped

plate in the ligh tight casing be sure to reclose the case right after taking out the plate to be developed.

12. Turn on the lights after 1 min. of the final rinse stage.

13. While in the final rinse stage, clean three of the dishes with the detergent and dry.

14. To remove all excess water the plate is cleaned with distilled water and Methanol. Mix the two liquids according to the following ratios and pour each mixture in the three clean dishes.

	(Methanol)	:	(D.I. H_2O)
Mixture A.	1	:	2
Mixture B.	1	:	1
Mixture C.	1	:	0

15. Arrange the dishes in the mixture order A, B, C, from left to right.

16. After the final rinse stage, Place the plate in the three mixtures according to the following time schedule:

Mixture A.	45 secs.
Mixture B.	45 secs.
Mixture C.	45 secs.

17. Finally, Place the developed glass mask back in a protective box or wrap in a tissue. Care should be taken not to scratch the emulsion from this point on.

18. Reclean all dishes and beakers, return all chemicals and supplies to their proper storage place, and leave darkroom in the same clean condition as it was upon entering.

Unit 5. Preparation Of The Wafer With Photo Resist And The Spinner.

In order for the wafer, somtimes referred to as the chip, to be patterned as a microstrip circuit the wafer must be covered with a thin film of photo resist.* This is accomplished through the use of a spinner which insures a uniform coating. The rotation speed is controlled such that slower speeds result in a thicker coat and faster speeds yield a thinner coating. When exposed to ultraviolet light via the mercury lamp in a mask aligner, a portion of the photo resist becomes exposed and is removed in the following developing stage. The unexposed portion is polymerized during the baking stage and hence is protected from the etching chemicals. The "clean" room located in Rm. 2436 Engr. Bld. contains many of the required supplies for this procedure. There are a few rules which must be followed when using this clean room:

1. No shoes allowed in clean room.
2. Keep doors and curtains closed.
3. Never turn off ceiling fan.
4. Keep the flow bench running at all times.
5. When finished, fill in log book.

* The photo resist currently being used is AZ-1350-B or Microposit positive resist which is red in color.

The procedure for spinning photo resist on a wafer is as follows:

1. Obtain the following materials:
   a. Tweezers.
   b. Pyrex petri dish with cover.
   c. Wafer(s) to be spun.
   d. Light tight case.
   e. Less than 1" outer diameter rubber washer.

2. Turn on N_2 tank valve. Adjust the output valve to 10 psi. This is the N_2 blower supply.

3. After entering clean room, Turn on the flow bench table light and turn on the N_2 blower valve located on the South wall.

4. Turn on both glove box blower and vacuum switches.

   Note: The vacuum switch should be off any time the spinner chuck vacuum is not in use. This increases the lifetime of the vacuum system.

5. Turn oven on and set temperature between 85 and 90 ^{o}C. The middle switch position is off and the upper position is on.

6. Turn on spinner fan and light above glove box.

7. Place plastic spray cups around spinner chuck.

8. Turn on spinner power and set for a rotation speed of 1000 rpm. This corresponds to the dial pointing towards the far left slash mark. The rpm scale is not accurate.

9. Set the R/S switch to the 1 sec. setting and adjust the spin time knob for a spin time of 15 secs.

10. Fill syringe with approximately 1 cc of photo resist.

    Note: Never pour extracted photo resist back into the photo resist supply bottle as it will contaminate the resist.

At this point the wafer must be placed on the spinner vacuum chuck. Wafers are usually sealed in dust free pouches. In the event a nonprotected wafer is used or the wafer must be precleaned before spinning, follow the "Wafer And Photo Resist Cleaning Procedure" before placing on chuck.

Note: Never touch wafer with fingers as finger grease can not be removed from the metal surface. Always use a tweezers and pick up wafer at corners only since they rarely are used in the microstrip layout.

Since microstrip circuits require a ground plane the photo resist must be spun on both sides of the wafer. The resist spun on the top is exposed to light to make the desired circuit pattern. The resist spun on the bottom will prevent etching of the surface metal used as a ground plane. Two layers of photo resist should first be spun on the bottom each followed by a soft bake. Then, the top layer is spun followed by another soft bake. A "soft" bake refers to a baking process which does not polymerize the resist whereas a "hard" bake refers to a procedure where the wafer is baked at a higher temperature resulting in polymerization of the photo resist.

11. Place wafer on vacuum chuck and turn on the spinner vacuum switch. The vacuum gauge should show a vacuum reading of at least 15.

12. Apply the photo resist to the center of the wafer until it spreads out to approximately 1/4 inch from the edge. The resist should not be allowed to run over the edge as this will cause excess deposits of resist on the other side.

13. Start the spinner with the red start button. It should spin for approximately 15 secs.

14. After the wafer has stopped spinning, turn off spinner vacuum, grasp the wafer by the corner with the tweezers and place in the Pyrex dish.

Note: Do not use a plastic dish as it will melt in the oven.

15. Bake the wafer in the oven for 10 mins. at 85 to 90 ^{o}C.

16. To insure a thick coating of photo resist to protect the bottom metal surface, repeat steps 10 through 15 to spin a second coat of photo resist on the bottom then proceed to step 17.

17. Place the rubber washer on the vacuum chuck. This will provide a smooth surface on which to place the wafer bottom preventing any damage to the prespun resist. This washer should be smooth and pliable enough to still allow the vacuum gauge to reach a reading of 15.

18. Place the wafer on the washer with the prespun side down and repeat steps 10 through 15 to spin the top of the wafer.

Note: From this point on extreme care should be exercised not to scratch the photo resist on either top or bottom as stray metal spots or unwanted breaks in the circuit lines may result. The wafer should be kept away from chemicals such as Acetone which is used as a solvent to remove photo resist.

19. Place the covered Pyrex dish containing the finished wafer in the light tight case.

20. Using a little Acetone and a Q tip swab, clean the spinner chuck of all photo resist.

21. Discard excess photo resist in syringe and clean syringe and plastic spray cups with Acetone. The cleaning may be performed in the Thin Film Lab in room 2439 Engr. Bld.

22. Turn off; spinner vacuum, power, fan, light, N_2 blower valve, system vacuum and blower switches, oven, and finally, the flow bench light. Double check to make sure the vacuum switch is off!

23. Be sure the curtains and doors are shut on the clean room when finished.

Wafer and Photo Resist Cleaning Procedure.

In the event the wafer must be cleaned before resist spinning or the spinning process must be repeated, the following procedure lists the steps involved for cleaning the wafer.

1. Obtain the following materials:
   a. Plastic squeeze bottles of Acetone and Methanol.
   b. Tweezers.
   c. N_2 blower.
   d. Excess solution dump dish.

2. Turn on N_2 tank valve. Adjust the output valve to 10 psi.

3. Using tweezers to hold the wafer over dump dish, wash wafer free of photo resist with Acetone.

4. Rinse wafer with Methanol.

5. Blow wafer dry with N_2 blower.

6. Place cleaned wafer in Pyrex petri dish and cover.

7. Empty dump dish in sink and clean with a mild detergent.

8. Turn off N_2 supply.

Unit 6. Exposing The Wafer With The Mask Aligner.

The mask aligner is a device which accurately aligns the wafer under the glass mask and then exposes the wafer to a source of ultraviolet light. The light is provided by a mercury lamp housed in the rear of the unit.

The following steps indicate the correct procedure for using the mask aligner currently located in the "screen" room of 3559 Engr. Bld. In case the "screen" room is not darkened from stray ultraviolet light, some form of light curtains should be hung up. The room does not have to be light tight but should be somewhat dark to prevent excess ultraviolet light from pre-exposing the

wafer.

1. Obtain the following materials:
   a. Glass mask containing the desired circuit pattern.
   b. Prepared wafer stored in a light tight case.
   c. Tweezers.
   d. Lens cleaning paper.
   e. Spacing washer.

2. Turn on the N_2 tank valve. Adjust the output valve to 50 psi.

3. Extend the vacuum pump exhaust hose out an open window.

4. Upon entering the "screen" room, close the door, and blind all outside light.

5. Turn on the overhead lamp & mask aligner power switch and plug in the vacuum pump. Adjust the external aligner N_2 valve to 50 psi.

6. Manually lift the head to the full upright position and place the glass mask in the metal holder with the emulsion side down. The mask should fit securely into the white pliable seal of the mask holder. Care should be taken not to damage this seal. After the mask is secure in the white seal, press down on the corners of the mask until the small vacuum gauge located on the lower left panel indicates a small amount of vacuum. A reading of 5 or higher is desirable. A poor seal of the mask in the metal mask holder will result in unwanted movement of the wafer beneath the mask while in contact mode.

7. Place the holder in the position slots and secure in place with the black clamp ring.

8. With slight pressure applied to the clamp ring, turn on the clamp switch located at the left and check for a secure clamp ring fit.

9. Cycle the turn table contaning the vacuum chuck to the front position by using the table turn button located at the left, place the spacing washer on the center of the

chuck, then, with the tweezers place the wafer on the washer and check for good wafer vacuum. A spacing washer is required with this aligner to position the wafer close enough to the mask when the wafer is cycled between contact and seperate modes.

10. Cycle the turn table to the rear position and press the red contact button located on the manipulator. This will bring the chuck and wafer up in contact with the glass mask. Contact is indicated by the lighting of the red contact LED located at the right of the manipulator. After approximately 1 sec. the chuck will drop into separate mode and the green LED will light while the red light goes out.

11. In separate mode, the manipulator may be used in to position the wafer in the correct position under the mask. Press and hold the scan button located on the left while moving base plate to move the entire chuck and mask assembly together. With the scan botton released, moving the manipulator while pressing the white button allows large scale motion of the wafer under the mask. Moving the manipulator without pressing any buttons results in very fine wafer adjustment. The rotation knob at the front left of the base plate may be used in separate mode to rotate the wafer under the mask as much as $\underline{5}^{o}$ either direction.

    Note: The wafer may not be moved under the mask while in contact mode but the scan feature works in either contact or separate mode.

12. Turn on the mercury lamp power switch, ignite the lamp with the lamp start switch and allow to warm up for $\underline{5}$ mins. Try to shield as much stray ultraviolet light from the wafer as possible.

```
* * * * * * * * * * * * * * * * * * * * * * * * * * * * * * * *
*                                                               *
*  Caution: Do not look directly at the ultraviolet             *
*           light or severe eyesight damage may result.         *
*                                                               *
* * * * * * * * * * * * * * * * * * * * * * * * * * * * * * * *
```

13. After approximate aligning of the wafer and mask in separate mode, press the red contact button to bring the wafer up in contact. Lower the head and then, using the optics provided, focus on the surface of the metal cladding then use the scan feature to recheck wafer alignment. Pressing the red button on the manipulator cycles the wafer between contact and separate modes for realignment if necessary.

Note: If the wafer shifts under the mask while in contact mode or if the wafer moves slightly under the mask when cycling between contact and separate modes, check the small vacuum gauge on the left panel for a vacuum reading of any amount. In the event there is no reading, press down on the corners of the mask to allow a good mask seal. This should cause a rise in the vacuum gauge reading to about 5 or more and should correct the problem.

14. The aligner may be returned to the reset mode at any time by pressing the reset button located on the left. In the reset mode the chuck will drop away from the mask where it may be tuned to the forward position using the turn table button.

15. Set the exposure time for 20 sec. and press the expose button located to the left. The head will raise and extend forward. The aperture will open and expose the wafer for the set time. Then, the head will return to the retracted position and the chuck will drop as the aligner returns to the reset mode.

16. Turn off the mercury lamp.

Note: Refrain from turning the mercury lamp on and off frequently as it reduces the lamp lifetime. Allow at least a 20 min. cool down time before reigniting the lamp.

17. Cycle the table to the forward position, and place the exposed wafer in the light tight case for future developing.

18. Remove the glass mask and reinsert the test mask in the holder.

19. Unplug the vacuum pump. Turn off the aligner power. Cover the aligner with the dust cover. Turn off the overhead lamp.

20. Turn off the N_2 tank valve and pull in the vacuum system exhaust tube.

Unit 7 Developing The Exposed Wafer.

To remove the exposed photo resist from the areas adjacent to the the microstrip lines, the wafer must be developed. This may be performed in the clean room in 2436 Engr. Bld. This is a relatively simple procedure and is described here:

1. Obtain the following materials:
   a. Exposed wafer.
   b. Plastic squeeze bottle of distilled water.
   c. AZ-Developer.
   d. 10 ml graduated cylinder.
   e. Small mixing dish.
   f. N_2 blower.

2. Turn on oven to 120 ^{o}C.

3. Mix a 1:1 solution of (D.I. H_2O) : (AZ-Developer) in the mixing dish. Approximately 15 ml of each should be sufficient.

4. Place wafer in mixture and agitate until the circuit lies are well defined and the unwanted photo resist has been removed. Be careful not to develope so long that the photo resist is removed from the circuit lines. This should take approximately 5 to 10 secs. to completely develope the wafer.

5. Rinse wafer with D.I. H_2O and blow dry with N_2.

6. Bake wafer in oven at 120 ^{o}C for 12 mins. This will make the remaining photo resist insensitive to light.

7. After baking, place wafer in Pyrex dish and cover.

8. Discard remaining developer mixture, clean dish and graduated cylinder, turn off oven and N_2 blower.

At this point the position of the microstrip lines relative to the edges of the substrate should be checked for alignment. In the event the circuit lines are skewed or otherwise improperly positioned, the wafer may be reused by cleaning the wafer as in the latter part of unit 5 and then repeating units 5 through 7.

Unit 8. Etching The Wafer.

The metal cladding usually found on alumina substrates is a combination of a thin layer of chromium under a thin layer of gold. After the photo resist has been removed from the areas surrounding the microstrip lines, the bare metal must be removed in the etching stage. First the gold will be etched then the chromium. However, since the metalization must be removed from the edge of the substrate but not from the bottom ground plane, the photo resist must be removed from the edge without disturbing the resist on the circuit lines or on the bottom surface metal. This is accomplished by carefully scraping the edge of the substrate with the edge of a X-ACTO knife. This effectively bares the edge metal to be etched by the chemicals.

```
* * * * * * * * * * * * * * * * * * * * * * * * * * * * * * * * * * *
*                                                                     *
*    Note: Up to this point during the chip production, the           *
*          wafers may be reused by removing all photo resist          *
*          as in the wafer cleaning procedure.                        *
*                                                                     *
* * * * * * * * * * * * * * * * * * * * * * * * * * * * * * * * * * *
```

All chemical mixtures should be mixed prior to beginning the etching procedure. The etching stage should be performed in the Solid State Chemical Lab., Rm. 2434 Engr. Bld.

1. Obtain the following materials:
   a. Two shallow Pyrex petri dishes.
   b. 10 ml graduated cylinder.
   c. Large supply of distilled water.
   d. Weighing scale.
   e. Small mixing beakers.

Gold Etching Solution.

2. Obtain the following chemicals:

   a. Iodine resublimed crystals AR; I_2

   b. Potassium iodide crystals ACS; KI

3. In a beaker, mix a solution of I_2KI in the ratio of:

I_2	KI	D.I. H_2O
1 g	2.7 g	5.3 ml

   * Suggested solution amounts: 3.0 g of I_2
     8.1 g of KI
     15.9 ml of D.I. H_2O

4. Mix the total I_2KI solution with distilled water in the following ratio:

I_2KI	D.I. H_2O
1	2

   * Suggested solution amounts: All of the I_2KI solution to 30 ml of D.I. H_2O

* The above suggested solution amounts will produce enough etching solution to etch 2 wafers. Half of the solution should be used for one wafer and the remaining half saved for the other wafer.

5. Agitate the solution thoroughly then pour the gold etch solution into one of the Pyrex mixing dishes and set aside. The mixed gold etching solution should be dark purple in color and be free of any undisolved chemicals.

Chromium Etching Solution.

6. Obtain the following chemicals:

   a. Ceric Ammonium Nitrate (CAN) ACS; $(NH_4)_2Ce(NO_3)_6$

   b. Glacial Acetic Acid NF; $C_2H_4O_2$

7. In a beaker, mix a solution of chromium etch in the ratio:

CAN	:	Acetic Acid	:	D.I. H_2O
180 g	:	45 ml	:	1000 ml

Suggested solution amounts:

5	g of CAN
1.25	ml of Acetic Acid
28	ml of D.I. H_2O

* Caution: The Glacial Acetic Acid is extremely concentrated and therefore is harmful if poured on skin and fatal if swollowed. Handle with care. Pour acid only under chemical vapor hood and only while wearing plastic gloves. Do not inhale fumes.

8. Agitate the solution thoroughly then pour into a second Pyrex dish and place next to the gold etch. The chromium etching solution should be yellowish in color and may be used for both wafers to be etched.

9. Place the wafer into the gold etch solution and agitate until all gold metal surrounding the circuit lines has disappeared. Then rinse with D.I. H_2O.

Note: It may take 25 mins. of constant agitation to completely remove the gold. Check the wafer frequently to be sure the circuit lines are not being etched by the solution.

When the gold has completely disappeared the wafer should have a glossy, chrome surface everywhere except along the microstrip circuit lines and the resist covered ground plane metal.

10. Place the wafer into the chromium etching solution and agitate until the chromium surface has disappeared leaving the white alumina substrate underneath.

Note: The change from chromium color to white will happen very fast. Usually around 10 seconds. After the chromium has vanished, Immediately rinse the wafer in D.I. H_2O. Delay at this stage may cause severe under cut of the chromium layer beneath the gold circuit lines.

11. Place the etched chip in a clean Pyrex dish and cover.

12. Dispose of all excess solution and clean all dishes and beakers with a detergent. Return all chemicals to their proper storage place.

Unit 9. Cleaning of the Finished Microstrip Circuit.

The last cleaning procedure removes all remaining photo resist and water spots from the etched wafer. The cleaning procedure is as follows:

1. Obtain the following materials:
    a. Plastic squeeze bottles of Acetone and Methanol.
    b. N_2 blower.
    c. Excess solution dump dish.

2. Turn on N_2 tank valve. Adjust the output valve to 10 psi.

3. Using tweezers to hold the wafer over dump dish, wash wafer top and bottom free of photo resist with Acetone. The remaining gold should be bright and shiny.

4. Rinse wafer with Methanol.

5. Blow wafer dry with N_2.

6. Place cleaned wafer in Pyrex dish and cover.

7. Empty dump dish in sink and clean with a mild detergent.

8. Turn off N_2 supply.

At this point, the finished chip should be examined for defects in the gold circuit pattern left on the substrate as well as the gold ground plane on the substrate bottom. The resolution of the entire chip production process can easily be checked under a microscope.

Appendix A. Chemicals And Material Supply Information

This section lists the locations where the chemicals and materials are stored and also all pertinent ordering information for restocking these items.

Materials

Ulano Rubylith RM3:

Location: This is stored in the "screen" room in 3559 Engr. Bld.

Supplier: Master Blue Print Inc.
810 Badger Rd.
Madison, Wis. 53713 Phone: (608) 256-4884

Size: 40" x 150"

Price: $29.95

High Resolution Photo Sensitive Plates:

Location: These are stored under refrigeration in the Duplication room, 2415 Engr. Bld.

Supplier: Imtech Products Inc.
1295 Forgwood Ave.
Sunnyvale, CA. 90086

Size: 2" x 2" high resolution glass plates.

Quantity: 30 plates per box.

Price: $20.00 per box.

Substrates:

Location: These are stored in the supply cabinet in Rm. 3559 Engr. Bld.

Model #: 15-2504-1210 AL_5 O_3 Alumina substrates with chromium/gold metalization.

Supplier: Tek-Wave Inc.
55 Charles Lindbergh Blvd.
Mitchel Field, N.Y. 11553

Size: 1" x 1" x 0.025" thick

Quantity: 12 per pkg.

Price: $28.75 ea. or $345.00 per pkg.

Chemicals

Kodak D-19 Developer:

Location: This is stored in the "screen" room in 3559 Engr. Bld.

Supplier: Available from UW stores.
Stock # 2957; sale unit: 1 gal.

Price: $2.9476 per gal.

Kodak Fixer:

Location: This is stored in the "screen" room in 3559 Engr. Bld.

Supplier: Available from UW stores.
Stock # 3027; sale unit: 5 gal.

Price: $15.7059 per 5 gal.

Photo Resist:

Location: This is stored in the "clean room" in Rm. 2436 Engr. Bld.

Model #: AZ-1350-B or Microposit 1300-17

Supplier: Shipley Co.
580 Bonnie lane
Elkgrove Village, Ill. 60003
Phone: (312) 956-6550

Quantity: 1 Qt.

Price: $84.00 per Qt.

AZ-Developer or Microposit Developer:

Location: This is stored in the "clean room" in Rm. 2436 Engr. Bld.

Supplier: Shipley Co.
580 Bonnie Lane
Elkgrove Village, Ill. 60003
Phone: (312) 956-6550

Quantity: 1 gal.

Price: $20.70 per gal.

Iodine Resublimed Crystals AR; I_2

Location: This is stored in the "screen" room in 3559 Engr. Bld.

Supplier: Available from UW stores.
Stock # 2340; sale unit: 1/4 Lb.

Price: $5.2926 per 1/4 Lb.

Potassium Iodide Crystals ACS; KI

Location: This is stored in the "screen" room in 3559 Engr. Bld.

Supplier: Available from UW stores.
Stock # 2504; sale unit: 500 grams.

Price: $9.9332 per 500 grams.

Ceric Ammonium Nitrate (CAN) ACS; $(NH_4)_2Ce(NO_3)_6$

Location: This is stored in the "screen" room in 3559 Engr. Bld.

Stock #: 16774-21-3

Supplier: Aldrich Chemical Co.
P.O. Box 355
Milwaukee, Wis. 53201

Quantity: 250 grams.

Price: $20.70

Glacial Acetic Acid NF; $C_2H_4O_2$

Location: This is stored in the "screen" room in 3559 Engr. Bld.

Supplier: Available from UW stores.
Stock # 2008; sale unit: 5 pts.

Price: $8.8967 per 5 pts.

A special thanks to:

Assistant Editor **Tom McKay** for his contribution of the reduction camera.

Assistant Editor **Dave McGinnis** and **Gert Hohenwarter** for their "clean room".

Assistant Editor **Yiwei Chen** for his help with the developing and etching instructions.

-and-

The rest of the members of Beyer Labs Inc. for their advice and insight into this procedure.

Smead®
No. GN129-S
HASTINGS, MN
LOS ANGELES-CHICAGO-LOGAN, OH
McGREGOR, TX-LOCUST GROVE, GA
U.S.A.